POSTEK

RUGGED PARTS, DURABLE MACHINES

User's Manual

Direct Thermal

Commercial Barcode Label Printer

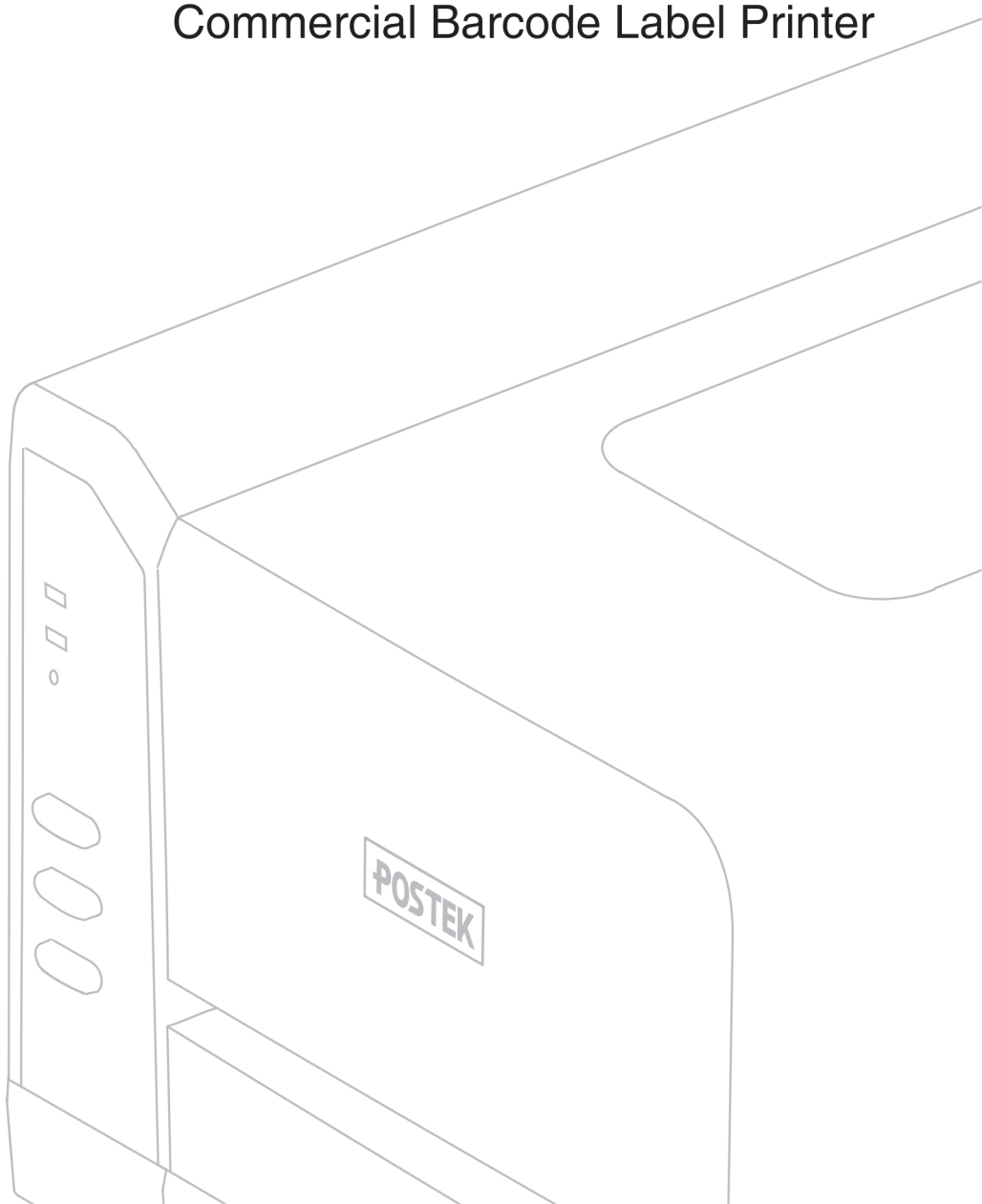

FCC Notice

This device complies with Part 15 of the FCC Rules. Operation is subject to the following two conditions: (1) this device may not cause harmful interference, and (2) this device must accept any interference received, including interference that may cause undesired operation.

This equipment may generate, use and/or radiate radio frequency energy. If not installed and used in full accordance with this User's Manual, interference to radio communications may occur. This equipment complies with the limits for a Class A Information Technology Equipment pursuant to Part 15 of the FCC Rules, which are designed to provide reasonable protection against such interference when operated in a commercial environment. Operation of this equipment in a residential area may also cause interference. In such case the user, at his/her expense, will be required to correct the interference using whatever means necessary.

Trademarks

POSTEK is a registered trademark by POSTEK Electronics Co., Ltd.
ARM is a registered trademark of Advanced RISC Machines Ltd.
Microsoft, Windows are registered trademarks of Microsoft Corporation.

Copyright

© 2022 by Postek Electronics Co., Ltd. All rights reserved. Under the copyright laws, this manual cannot be reproduced in any form without the prior written permission of POSTEK. No patent liability is assumed, with respect to the use of the information contained herein.

Disclaimer

POSTEK barcode/RFID printers are developed and produced by Postek Electronics Co., Ltd (hereinafter as "POSTEK") with the adoption of direct thermal/thermal transfer printing and RFID encoding techniques. For thermal transfer printing, matching ribbons and media are required. Meanwhile, the wide variety of RFID chip and antenna designs make it difficult to guarantee RFID tag's 100% compatibility with POSTEK printers, to satisfy your printing needs, please consult with the local reseller(s) to choose the matching consumables for POSTEK printers.

This manual has been validated and reviewed for accuracy. The instructions and descriptions it contains are accurate for the POSTEK printer at the time of this manual's distribution. However, succeeding printers and manuals are subject to change without notice. POSTEK assumes no liability for damages incurred directly or indirectly from errors, omissions or discrepancies between the printer and this manual.

To protect your interest, and to prevent loss due to improper handling, please read the

corresponding user’s manual before operation, and don't use the printer during abnormal conditions. In no event shall POSTEK be liable for any damage or loss caused by human misoperation, including but not limited to loss of business profits, business interruption, loss of business information, or other pecuniary loss.

Although this manual describes and details many issues which could possibly occur, the manufacturer cannot warrant against unpredictable conditions during the printer’s application. For problems such as the printer not working, missed or unclear print content, etc., POSTEK and/or its resellers are responsible for troubleshooting (according to POSTEK Warranty Clauses). In no event shall POSTEK or the resellers involved be liable for any direct or indirect loss, including but not limited to loss of business profits, business interruption, loss of business information, or other pecuniary loss.

Important Safety Instructions

- Only qualified and trained service technicians should attempt to repair the printer.
- Do not place the printer on or near a heat source.
- Be sure that the output of the power adapter is 24VDC and your power source matches the rating listed on the power adapter. Be certain your power source is grounded.
- To avoid getting an electric shock, do not use a worn or damaged power cord. If the power cord becomes damaged or frayed, replace it immediately.
- Do not insert anything into the ventilation slots or openings on the printer.
- The printer and power adapter should never be operated in a location where either one can get wet. Personal injury may result.
- The printhead becomes hot while printing. To protect from damaging the printhead and risk of personal injury, avoid touching the printhead.
- To get increased printhead longevity and higher quality printouts, always use approved labels, tags and thermal transfer ribbons. Approved supplies can be ordered from your Postek authorized reseller.
- Static electricity that accumulates on the surface of the human body or other surfaces can damage or destroy the printhead or electronic components in this device. DO NOT touch the printhead or the electronic components with bare hands.
- Place the printer on a flat, firm, solid surface.
- Never operate in a high temperature environment.
- Turn off the power when not in use for extended periods.
- Follow all recommendations and setup instructions included in this manual.

Contents

Preface 1

Important Notes 2

Chapter 1: Introduction 3

1.1 Specifications 3
1.2 Contents in the Box 4

Chapter 2: Setup and Use 5

2.1 Main Parts and Structures 5
2.1.1 Front View 5
2.1.2 Interior View 6
2.1.3 Rear View 7
2.2 Basic Operations 8
2.2.1 Power Switch 8
2.2.2 The Front Panel 8
2.2.3 Advanced Functions 10
2.2.4 DIP Switches 11
2.3 Setting up the Printer 13
2.3.1 Interface Connection 13
2.3.2 Connecting the Printer 13
2.3.3 Loading the Media 14
2.3.4 Using the External Media Stand 19
2.3.5 Adjusting the Media Sensor 24
2.4 Installing the Printer Driver 27
2.4.1 USB Port Installation 27
2.4.2 Network Port Installation 31
2.5 Installing Label Editing Software 38

Chapter 3: Maintenance 39

3.1 Cleaning the Printhead 39
3.2 Cleaning the Platen Roller 39
3.3 Cleaning the Printer Interior 40
3.4 Cleaning the Sensors 40

Chapter 4: Troubleshooting 41

4.1 LED Error Indications 41
4.2 Miscellaneous Issues 42

Appendix A: Interface Specifications 43

Appendix B: ASCII Table 44

Preface

This manual explains how to set up and begin using your printer. It also provides detailed information on configuring your printer, basic operations, care and troubleshooting.

Please read this manual carefully before using the printer.

Symbol Conventions

The symbols that may be found in this document are defined as follows.

Symbol	Description
 WARNING	Alerts you to a medium or low risk hazard that could, if not avoided, result in moderate or minor injury.
 CAUTION	Alerts you to a potentially hazardous situation that could, if not avoided, result in equipment damage, data loss, performance deterioration, or unanticipated results.
 NOTE	Provides additional information to emphasize or supplement important points in the main text.

Version

Version 1.3, published in July, 2022

Important Notes

Please read the following passages thoroughly before proceeding.

Printhead

The thermal printhead can be easily damaged due to its precision construction. A printhead damaged by misuse is not covered under the terms of the warranty. To ensure longevity of the printhead, please note the following:

- DO NOT scrape or use tools that might damage the printhead surface.
- To protect from corroding the printhead, DO NOT touch the printhead with bare hands.
- DO NOT use thermal paper or thermal transfer ribbons which contain Na, K or Cl elements.
- Keep printhead from any form of liquid or dampness.
- Only use a cotton swab dipped in anhydrous isopropyl alcohol to clean the printhead.
- Always use high-quality consumables:
  - When the printhead module is closed, pressure is placed directly onto the printhead; dirt such as paper scraps, sand, dust and glue can scrape or damage the printhead.
  - Therefore, please always inspect consumables for high quality before purchasing. Any printhead damage caused by poor quality consumables is not covered under warranty.

Cutter (Optional)

The printer equipped with a cutter can automatically cut the label after printing. However, automatic cutters pose a safety hazard since the blades are very sharp. To prevent injuries and cutter failures while using one of the many types of automatic cutters, please follow the safety and maintenance rules listed below:

- Before using the cutter, be sure you have been trained by a qualified individual. A written procedure covering the cutter's use is recommended.
- It is very important to choose the right cutter model for the application to ensure personal safety and prevent damage to the cutter caused by cutting wrong types of media.
- Keep loose items such as long hair, clothing, jewelry, away from the cutter.
- Don't put anything except print media inside the cutter.
- Turn off power of printer if you notice abnormality with the cutting process and alert a qualified technician to resolve the issue.
- Never cut a print media which exceeds the maximum operating conditions of the cutter.
- Not every cutter model is designed to be able to cut through adhesive. Use only the dedicated cutters to cut through adhesive materials. Even so, regular cleaning is required to remove the adhesive built up on the blades over time to prevent cutter jam.
- Routine inspection and maintenance are required to be performed by a qualified technician to keep the cutter in good working conditions.

Chapter 1: Introduction

1.1 Specifications

Item	Description
Printing Mode	Direct Thermal
Resolution	203dpi
Max Printing Speed	5 ips (127 mm/s)
Max Printing Width	4.09″ (104 mm)
Max Printing Length	40″ (1016 mm)
HEAT™ Level	II
Memory	8 MB FLASH ROM, 16 MB SDRAM
Media	Width: 4.72″ (120 mm) max., 0.98" (25 mm) min. OD: 5″ (127 mm) max. or 9″ (228.6 mm) max. (using External Media Stand). ID: 1″ (25.4 mm) min.
Minimum Label Length	Tear-off: 0.20″ (5 mm)
	Cutter: AG120/AG300: 0.51″ (13 mm)
Media Thickness	0.0023″ ~ 0.0098″ (0.06 ~ 0.25 mm), including liner
Media Sensor	Reflective and Transmissive
Fonts	Five built-in dot matrix ASCII fonts, user-downloadable TrueType Fonts
Barcode Types	1D Barcode: Code 39, Code 93, Code 128/subset A,B,C, Codabar, Interleave 2 of 5, UPC A/E 2 and 5 add-on, EAN-13/8/128, UCC-128, etc. 2D Barcode: MaxiCode, PDF417, Data Matrix, QR Code, etc.
Interfaces	RS-232 Serial, USB DEVICE 2.0
Power Adapter	Input: AC100~240 V, 50~60 Hz Output: DC 24 V, 2.5 A
Weight	3.97 lbs (1.8 kgs)
Dimensions	W 8.58″ (218mm) x D 10.0″(255mm) x H 5.91″ (150 mm)
Operating Environment	Temperature: 32° F ~ +104° F (0° C ~ 40° C) Relative humidity: 5% - 85% non condensing
Storage environment	Temperature: -40° F ~ +140° F (-40° C ~ 60° C) Relative humidity: 5% - 85% non condensing
Optional Items	Wi-Fi, Bluetooth, Guillotine Cutter, External Label Rewinder, Media Guide Adapter

HEAT™, or Heating Equilibrium Adaptive Tuning, is a POSTEK designed and developed cutting-edge technology that sets the benchmark for heat management in thermal printing. Printers equipped with HEAT™ have significant improvements in their printout clarity and print speed. The HEAT™ level represents the fineness of the heating uniformity with level I being the finest.

1.2 Contents in the Box

Inspect the shipping carton(s) for possible shipping damage, if damage is discovered, notify the shipping company to report the nature and extent of the damage.

Please check the items according to the Quick Start Guide. If there are any items missing, notify your authorized reseller.

Chapter 2: Setup and Use

2.1 Main Parts and Structures

2.1.1 Front View

Figure 2-1 shows the front view of the printer.

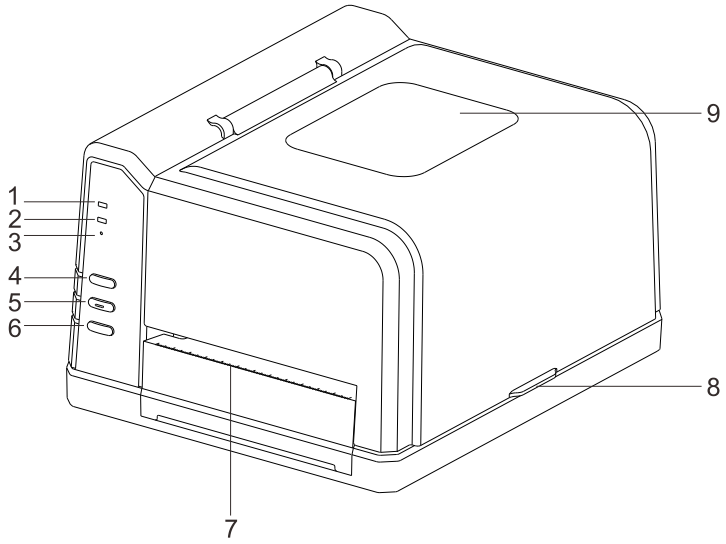

Figure 2-1 Front View

Table 2-1 Front View Description

Number	Description
1	[READY] Indicator
2	[MEDIA] Indicator
3	WIFI Indicator
4	[PAUSE/Self Test] Button
5	[FEED/Calibration] Button
6	[CANCEL/Reset] Button
7	Tear-off Bar
8	Cover Handle
9	Observation Window

2.1.2 Interior View

Figure 2-2 shows the detailed structure of the printer.

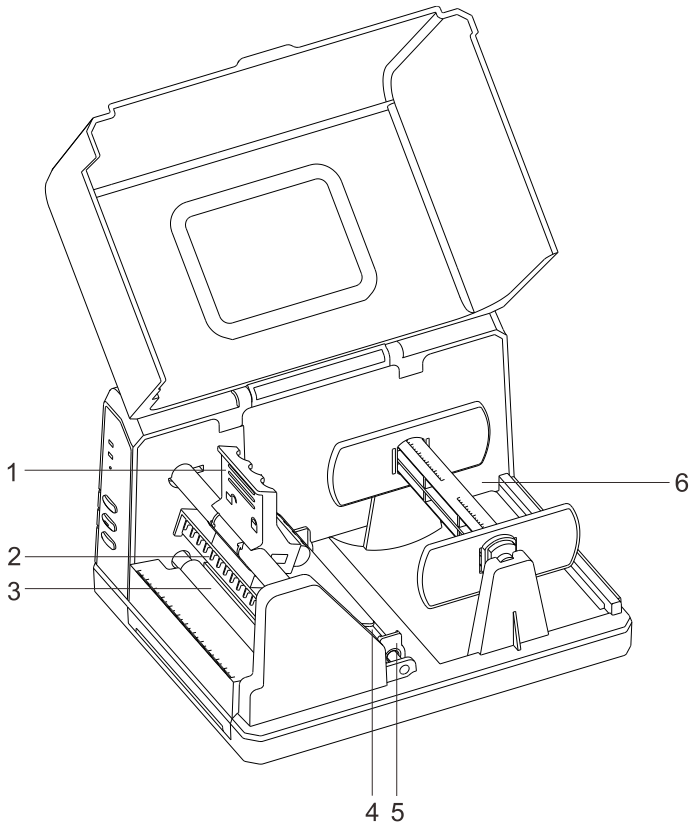

Figure 2-2 Interior View

Table 2-2 Interior View Description

Number	Description
1	Handle
2	Printhead Assembly
3	Platen Roller
4	Media Guide
5	Media Guide Rod
6	Media Compartment

2.1.3 Rear View

The printer is equipped with multiple interfaces. See Figure 2-3.

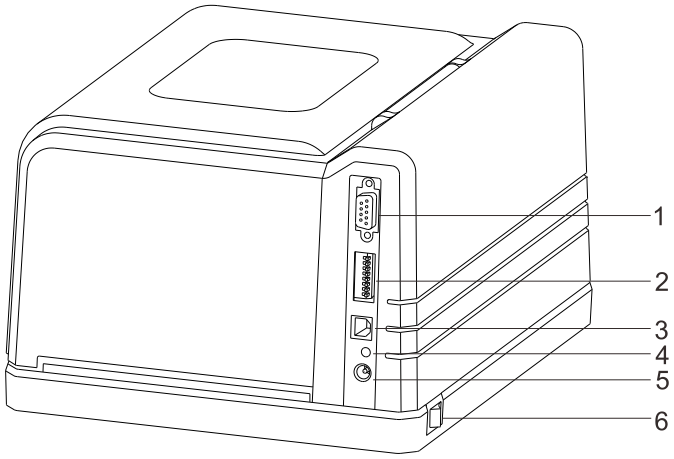

Figure 2-3 Rear View

Table 2-3 Rear View Description

Number	Description
1	RS232 Serial Port
2	DIP Switch
3	USB Port
4	WiFi RESET button
5	DC In Port
6	Power Switch

2.2 Basic Operations

2.2.1 Power Switch

The power switch is on the rear left side of the printer. The symbols on the switch are defined as follows:

- — stands for power on
- ○ stands for power off

2.2.2 The Front Panel

The Front Panel of the printer consists of:

- Three Indicators: [READY], [MEDIA] and WIFI
- Three multi-function buttons: [PAUSE/Self Test], [FEED/Calibration] and [CANCEL/Reset]

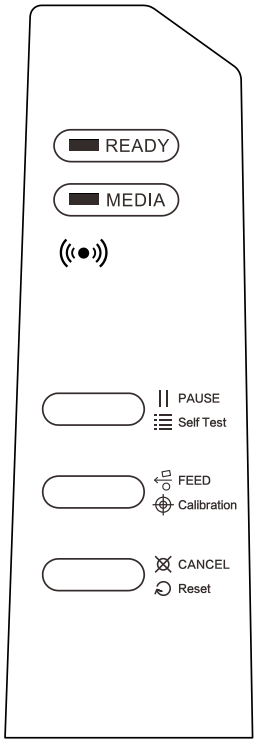

Figure 2-4 Front Panel

2.2.2.1 LED Indicators

The LED indicators on the front of the printer shows the different states that the printer is in, please refer to Table 2-4 for details.

Table 2-4 LED Indicator Description

LED Indicator	Description
[READY]	• If the indicator is on, the printer is ready and waiting for user input • If only the [READY] indicator is blinking, then the printer is paused and awaiting further instruction
[MEDIA]	• If the indicator is on, it means the printer is at a normal working state • If both the [READY] and [MEDIA] indicators are blinking, then the printer detected media out
WIFI	• If the indicator is on, it indicates the Wi-Fi is connected • If the indicator is off, it indicates the Wi-Fi function is disabled

2.2.2.2 Panel Buttons

The three buttons on the front of the printer, please refer to Table 2-5 below for details regarding their functionality.

Table 2-5 Panel Button Description

Buttons	Basic Functions	Advanced Functions (Press and hold for 4 seconds)
[PAUSE/Self Test]	• When printer is in working or standby state, press once to pause the printer • When printer is in a paused state, press once to resume	Self-test: The printer performs a self-test and prints out a configuration report
[FEED/Calibration]	When printer is in a standby state, press once and the printer will feed one label	Media Sensor Calibration
[CANCEL/Reset]	When printer is in an error state, press once to clear the error report	Reset: Resets the printer to Factory Default Settings

2.2.3 Advanced Functions

2.2.3.1 Media Sensor Calibration

When the printer is on standby, press and hold the [FEED/Calibration] button (hold for around 4 seconds), the printer will automatically feed labels and the media sensor calibration is done. During this process, the [READY] and [MEDIA] indicators will start blinking. When the two indicators stop blinking and return to a steady state, the media sensor calibration is complete.

NOTE

- *When it is the first time installing the media or when changing to a different type of media, media sensor calibration must be performed.*
- *No calibration is needed when using continuous media.*

2.2.3.2 Obtaining Printer Configuration Information

When the printer is on standby, press and hold the [PAUSE/Self Test] button (hold for around 4 seconds), the [READY] and [MEDIA] indicators will blink once and then return to a steady state, the printer will print a self-test page with detailed information regarding the printer's configuration then return to standby.

The information includes: the printer model, firmware version, hardware parameters and current status, thermal transfer/direct thermal mode, font list, etc.

2.2.3.3 Reset to Factory Settings

When the printer is on standby, press and hold the [CANCEL/Reset] button (hold for around 4 seconds), the [READY] and [MEDIA] indicators will start blinking (if no further input is detected for the next 8 seconds then the printer will return to standby). Release the [CANCEL/Reset] button and press it again to initiate the reset process, the [READY] indicator will be off and the [MEDIA] indicator will start blinking, when the two indicators are lit and return to a steady state, the reset process is complete.

NOTE

The number of printed labels (pcs) and printed length (m) cannot be restored to factory default value.

2.2.4 DIP Switches

The DIP Switch is located on the back of the printer, as shown in Figure 2-5.

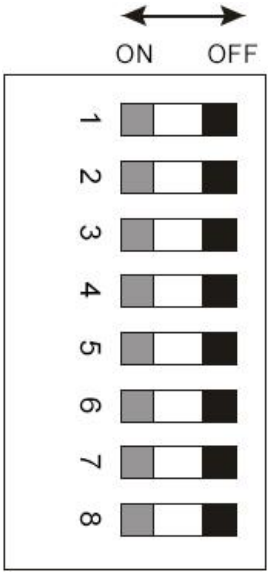

Figure 2-5 DIP Switch

Table 2-6 DIP Switch Description

Position	Corresponding Functions
1	Set printing mode ON: Direct Thermal OFF: Thermal Transfer
2	Set Tear-off Mode ON: Tear-off Mode enabled OFF: Tear-off Mode disabled
3	Set Cutter Mode (Only available on models with Cutter installed) ON: Cutter Mode enabled OFF: Cutter Mode disabled
4	Set Peeler Mode (Only available on models with Peeler installed) ON: Peeler Mode enabled OFF: Peeler Mode disabled
5	Set the media sensor type ON: Transmissive OFF: Reflective
6	Set DHCP (Dynamic Host Configuration Protocol) ON: Enabled OFF: Disabled
7&8	Set serial BAUD-RATE BAUD-RATE for each combination: 7 OFF & 8 OFF: 9600 7 ON & 8 OFF: 19200

Position	Corresponding Functions
	7 OFF & 8 ON: 38400 7 ON & 8 ON: 57600

CAUTION

- *Before making changes to the switches, please make sure the printer is powered off.*
- *All the switches should be off by default except the 5th position.*

2.3 Setting up the Printer

2.3.1 Interface Connection

CAUTION

When connecting the printer to a computer via the USB interface cable, make sure to utilize the same USB port used during the driver installation process. If the same USB port is not available or unknown, please go to the printer driver's Properties Dialogue Box, and make sure the correct port is checked under the Ports tab.

The printer supports RS-232 Serial and USB interface connections, you can choose to connect the printer to the computer via these ports.

To connect:

- Make sure the printer is powered OFF.
- The printer will identify the communication port automatically.
- The default values of the printer port can be obtained from the self-test report (see 2.2.3 Advanced Functions/Obtaining Printer Configuration Information).
- Cable configurations for Serial (RS-232C) interface can be found in Appendix A: Interface Specifications.
- Please take the following measures to reduce cable noise.
  - Restrict the length of the interface cable to less than 6' (1.83 M) if possible.
  - Keep the interface cable separate from the power cords.

2.3.2 Connecting the Printer

WARNING

- *Do not use the printer near liquids or corrosive chemicals.*
- *Using the wrong power adapter may cause damage to your printer. POSTEK assumes no liability for any damage in such cases. The rating for the printer is 24VDC.*

1. Make sure the printer is switched OFF.
2. Connect the power cord to the Power Adapter
3. Connect the Power Adapter's DC output plug to the DC IN port on the back of the printer.
4. Plug the power cord into a live wall outlet.

2.3.3 Loading the Media

The printer can be operated under three different modes: Standard Mode, Tear-off Mode, and Cutter Mode.

- In Standard Mode, the printer stops and goes into standby as soon as the print job is complete.
- In Tear-off Mode, after the print job is finished, the printer will feed the label until the edge of it aligns with the edge of the Tear-off Bar allowing easy tear off for the user.
- In Cutter Mode, the printer stops and cuts the printed label(s) (Only available on models with cutter installed).

2.3.3.1 Standard Mode

To load media into the printer while under Standard Mode, follow the steps below:

1. Lift the right cover of the printer and lift the Handle of the Printhead, as shown in Figure 2-6.

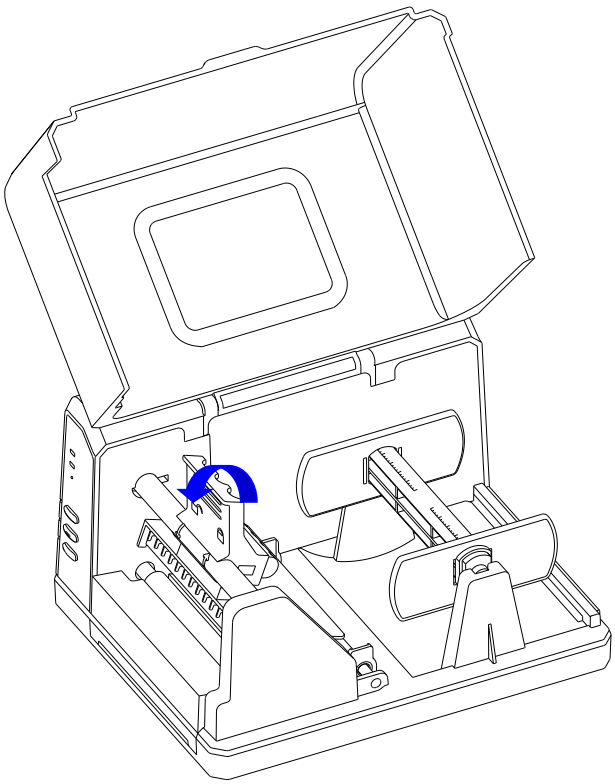

Figure 2-6 Lift the Handle

2. Load a roll of media (labels facing up) on the Media Spindle, then slide the two Media Roll Guides, with smooth sides facing toward the media, onto the Media Spindle from each end until both Media Roll Guides touch the media. When placing a roll of media with a 3″ ID core, please slide the two Core Adapters onto the Media Spindle first, as shown in Figure 2-7.

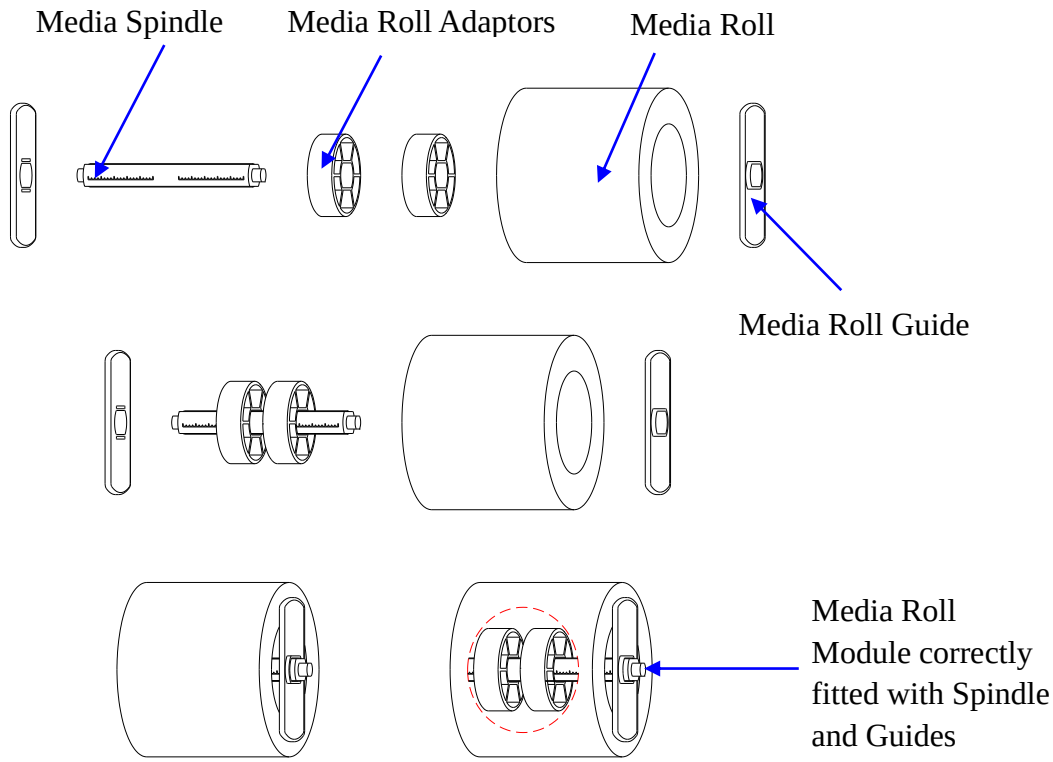

Figure 2-7 Place Media Roll on Media Spindle

3. Place the entire unit into the printer's Media Compartment.
4. Position the media roll in the middle of the Spindle, using the ruler on the Media Spindle for alignment. See Figure 2-8.

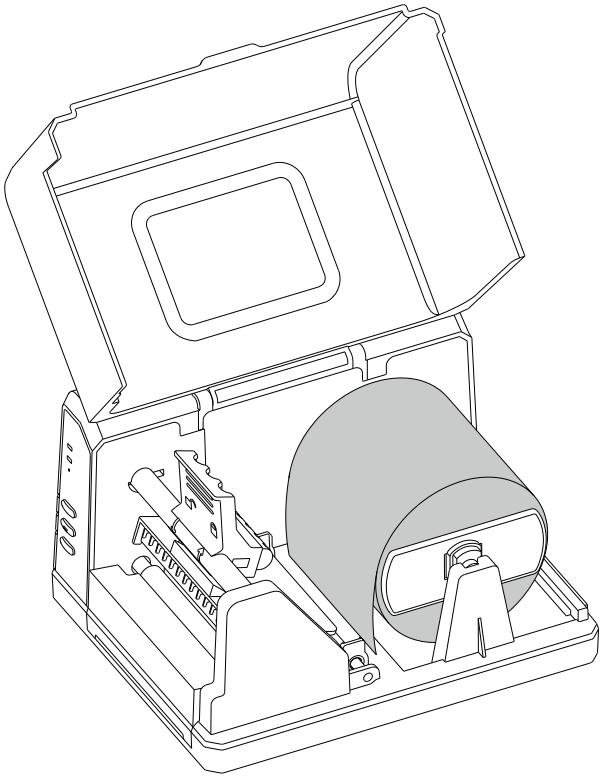

Figure 2-8 Load the Media

5. Thread the media under the Media Guide Rod, over and pass the Platen Roller to the front of the printer.
6. Slide the Media Guide to the edge of the media, making sure that the media remains flat and is placed in the middle of the Tear-off Bar. This can be checked with the ruler on the Tear-off Bar. See Figure 2-9.

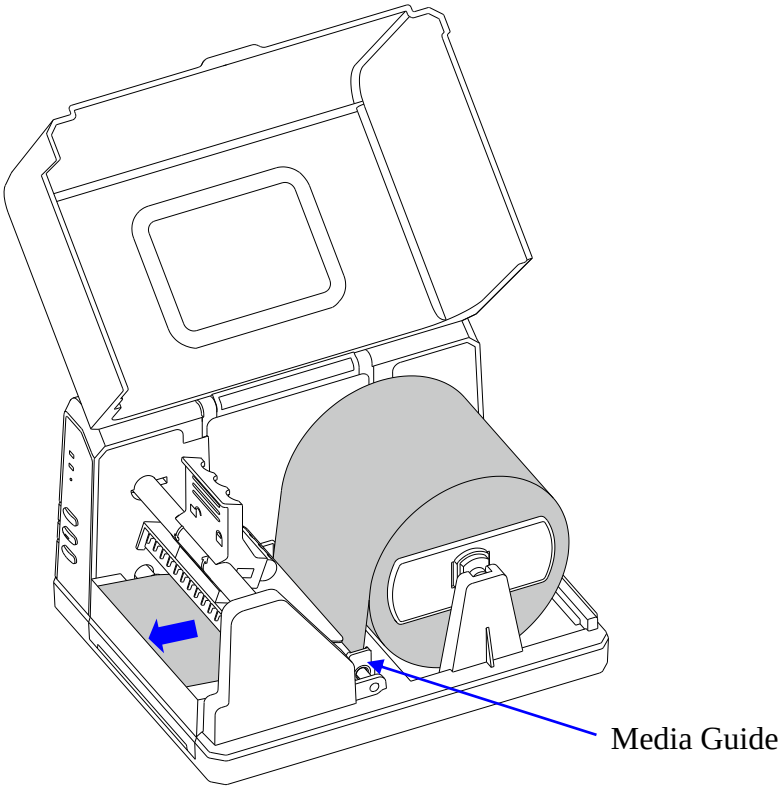

Figure 2-9 Slide the Media Guide

7. Press down the Handle of the Printhead to lock the Printhead. See Figure 2-10.

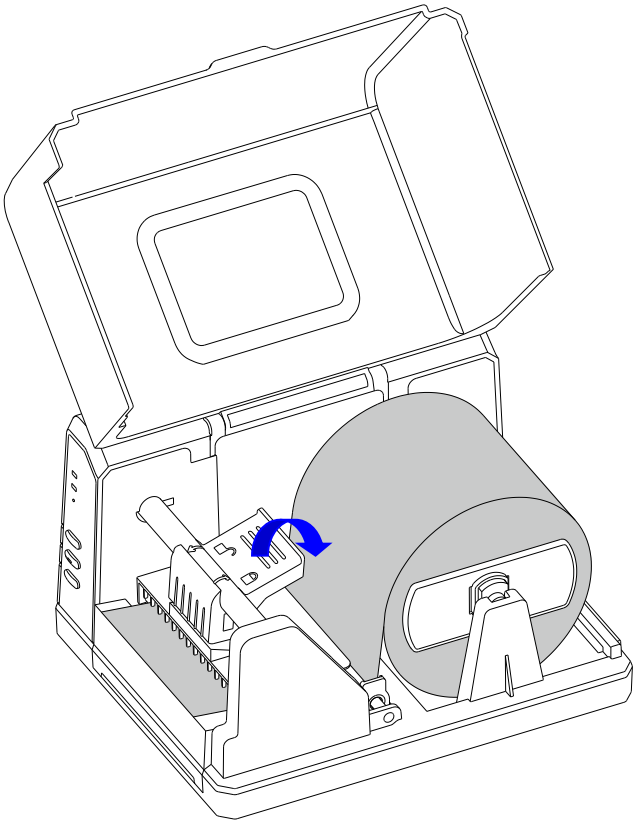

Figure 2-10 Media Loaded

8. Calibrate the media sensor. See 2.3.5 Adjusting the Media Sensor.

2.3.3.2 Tear-off Mode

To load media into the printer while under Tear-off Mode, follow the steps below:

1. Set the 2nd position of the DIP Switch to ON to enable Tear-off Mode.
2. Load the media referring to operations under Standard Mode.
3. Calibrate the media sensor. See 2.3.5 Adjusting the Media Sensor.

2.3.3.3 Cutter Mode (Cutter accessory required)

To load media into the printer while under Cutter Mode, follow the steps below:

1. Set the 3rd position of the DIP Switch to ON to enable Cutter Mode.
2. Restart the printer and reset the cutter when the printer is on: Press and hold the [CANCEL/Reset] button for 4 seconds until the [READY] and [MEDIA] indicators blink simultaneously. Release the [CANCEL/Reset] button and press it again to complete cutter reset. Turn off the printer.

   NOTE

   Please reset the cutter before installing the media to prevent any issues with installation.
3. Load the media referring to operations under Standard Mode. Thread the label through the gap between the upper and the lower cutter blades. As shown in Figure 2-11.

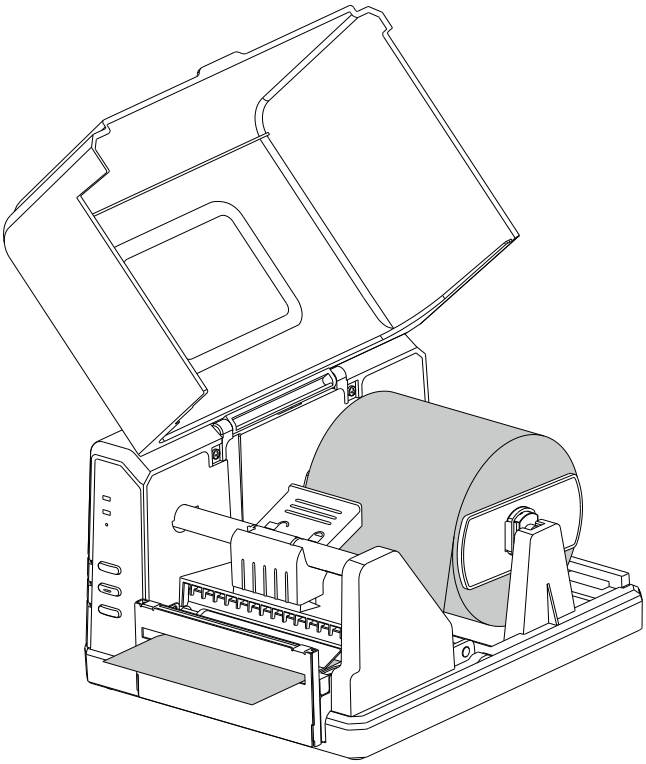

Figure 2-11 Media Loaded

4. Press down the Handle of the Printhead to lock the Printhead.
5. Calibrate the media sensor. See 2.3.5 Adjusting the Media Sensor.

CAUTION

The default cutter type is rotary cutter. If guillotine cutter is installed, please send the command: #UM>CU2 in Utility tool to the printer, and restart the printer after 3 seconds. Then send the command #UM>CC to set guillotine cutter as default, and restart the printer again.

2.3.4 Using the External Media Stand

CAUTION

It is recommended to install the External Media Stand when the outer diameter of the media roll is larger than 4 inches or when fanfold media is applied.

2.3.4.1 Label Roll

To load label roll on External Media Stand, follow the steps below:

1. Place the front part of the External Media Stand under the printer, making sure the two rear rubber feet of the printer are fitted into the two holes on the media stand, see Figure 2-12.

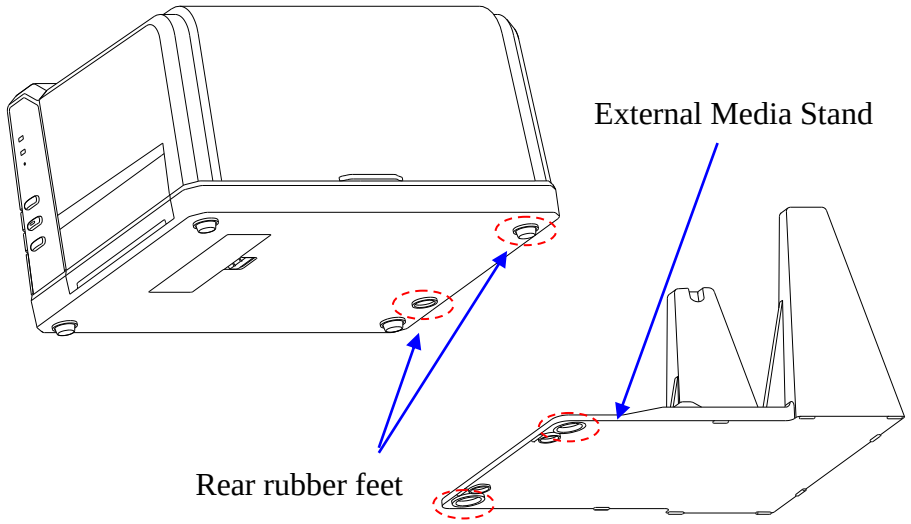

Figure 2-12 Place the External Media Stand

2. Lift the right cover of the printer and lift the Handle of the Printhead. See Figure 2-13.

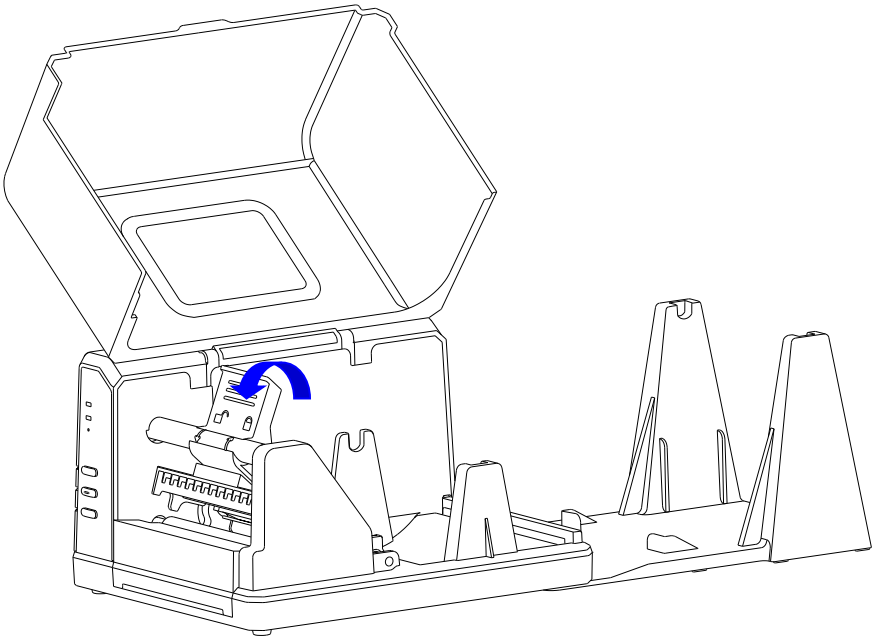

Figure 2-13 Lift the Handle

3. Load a roll of media (labels facing up) on the Media Spindle, then slide the two Media Roll Guides, with smooth sides facing toward the media, onto the Media Spindle from each end until both Media Roll Guides touch the media. When placing a roll of media with a 3″ ID core, please slide the two Core Adapters onto the Media Spindle first, as shown in Figure 2-14.

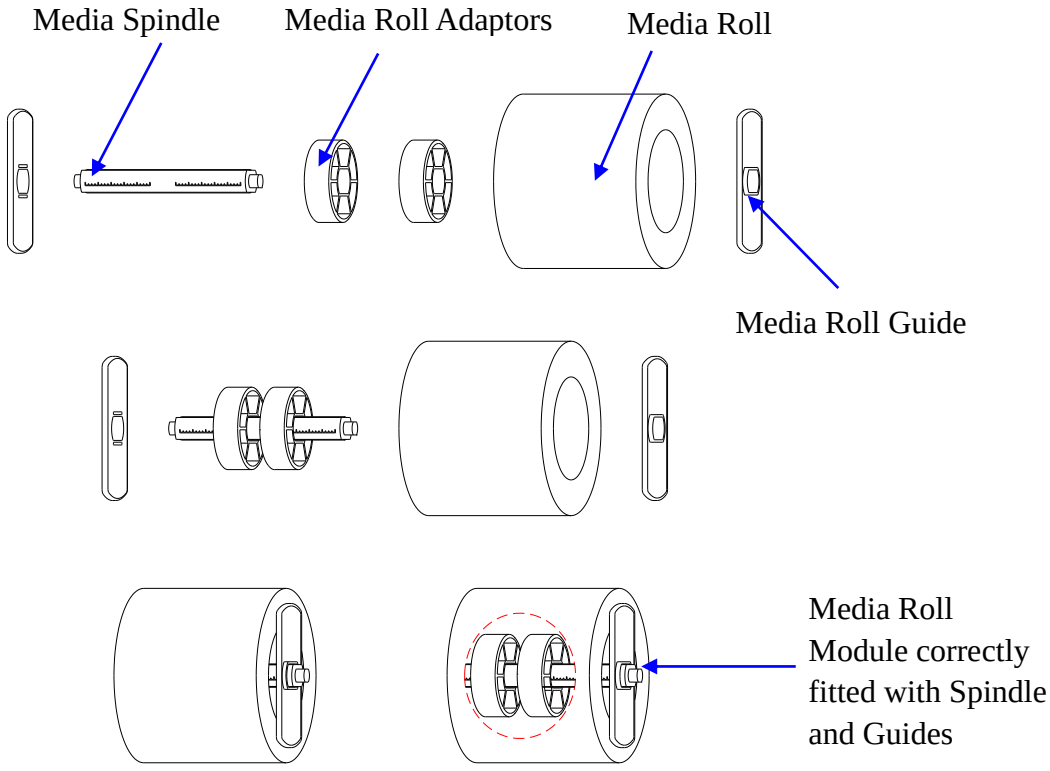

Figure 2-14 Place Media Roll on Media Spindle

5. Place the entire unit onto the External Media Stand.

6. Position the media roll in the middle of the Spindle, using the ruler on the Media Spindle for alignment. See Figure 2-15.

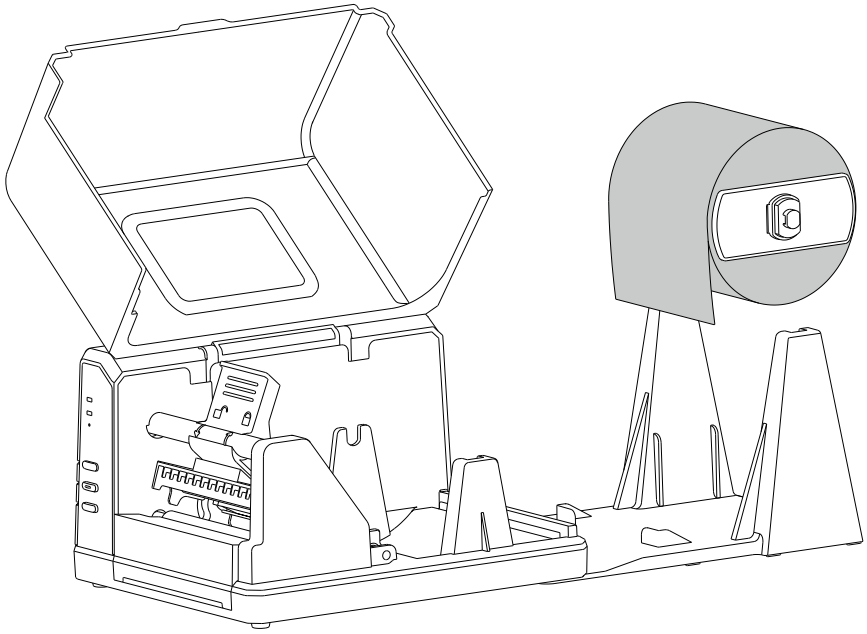

Figure 2-15 Load the Media

7. Thread the media under the Media Guide Rod, over and pass the Platen Roller to the front of the printer.
8. Slide the Media Guides to the edge of the media, making sure that the media remains flat and is placed in the middle of the Tear-off Bar. This can be checked with the ruler on the Tear-off Bar. See Figure 2-16.

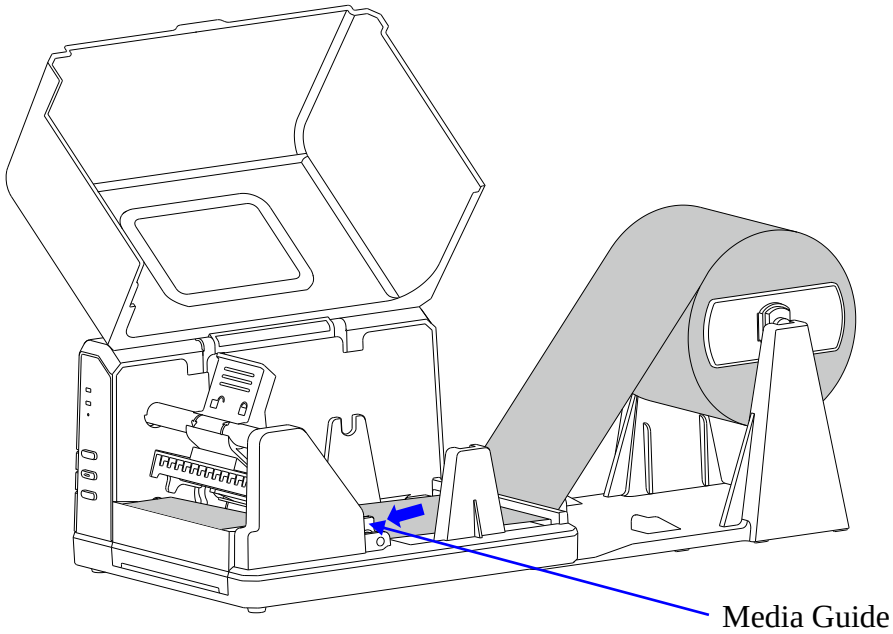

Figure 2-16 Thread the Media

9. Press down the Handle of the Printhead to lock the Printhead, then close the right cover. See Figure 2-17.

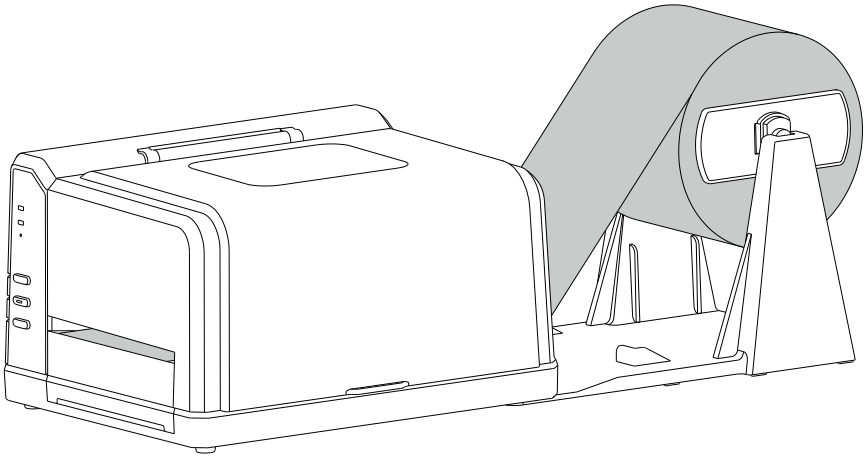

Figure 2-17 Media loaded

2.3.4.2 Fanfold Label

To load fanfold media on External Media Stand, follow the steps below:

1. Place the front part of the External Media Stand under the printer, making sure the two rear rubber feet of the printer are fitted into the two holes on the media stand, see Figure 2-18.

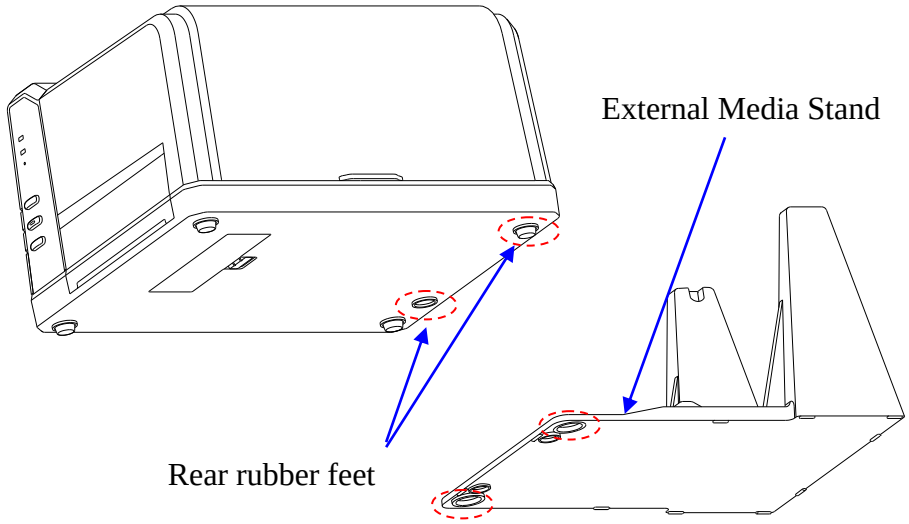

Figure 2-18 Place the External Media Stand

2. Lift the right cover of the printer and lift the Handle of the Printhead. See Figure 2-19.

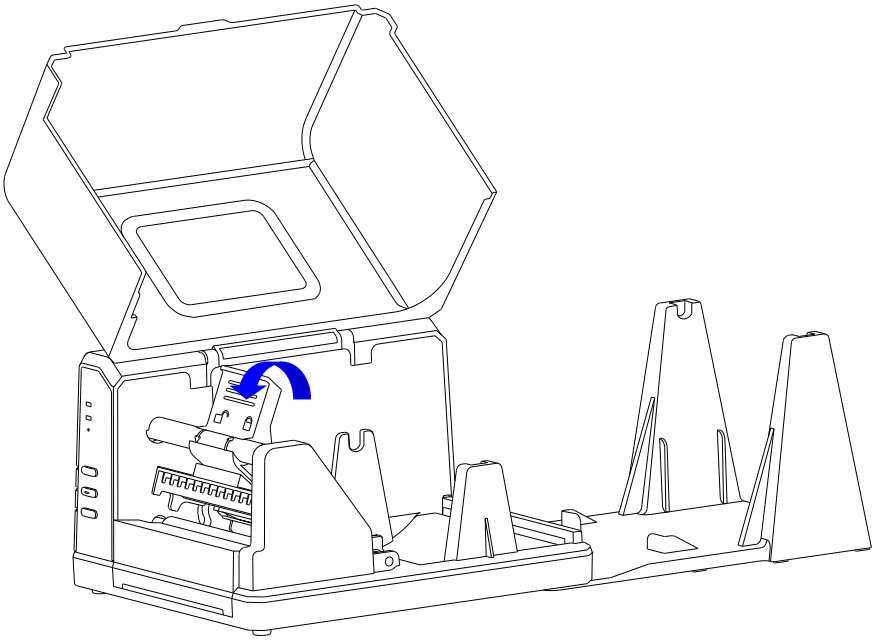

Figure 2-19 Lift the Handle

3. Thread the folded label through the media slot at the rear end of the printer, and go on to thread the media under the Media Guide Rod, over and pass the Platen Roller to the front of the printer.
4. Slide the Media Guides to the edge of the media, making sure that the media remains flat and is placed in the middle of the Tear-off Bar. This can be checked with the ruler on the Tear-off Bar. See Figure 2-20.

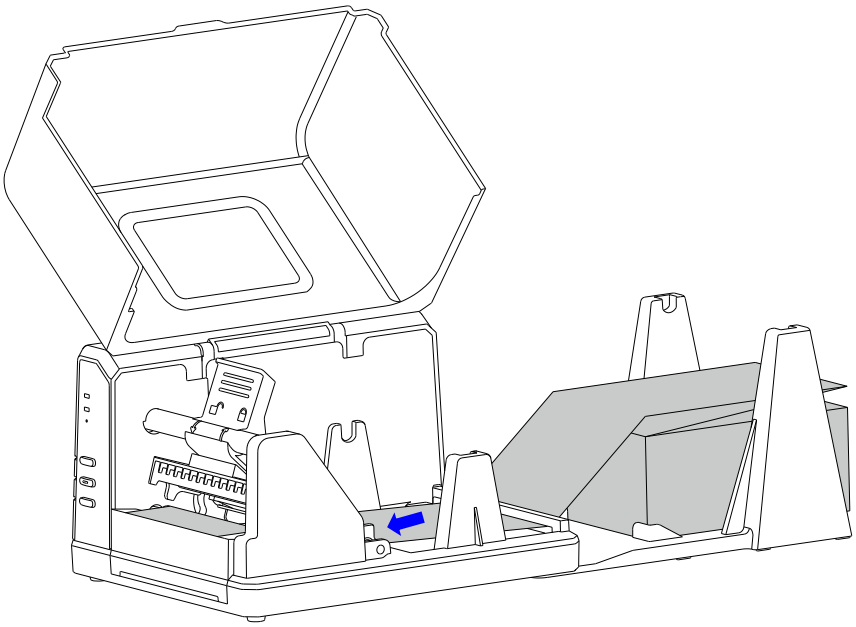

Figure 2-20 Thread the Media through Media Slot

5. Press down the Handle of the Printhead to lock the Printhead, then close the right cover. See Figure 2-21.

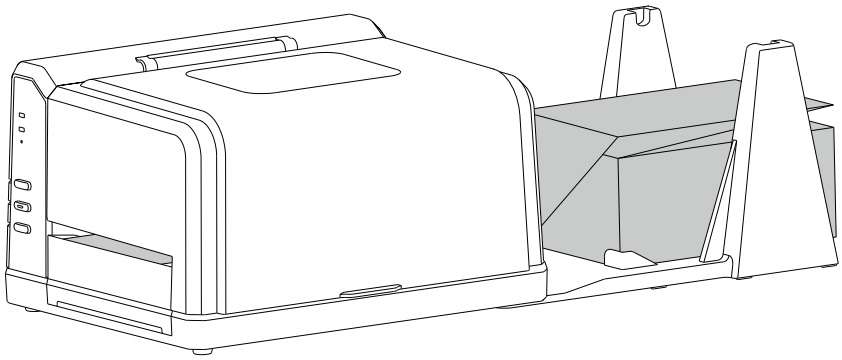

Figure 2-21 Fanfold Label Loaded

2.3.5 Adjusting the Media Sensor

CAUTION

- *When it is the first time installing the media or when changing to a different type of media, media sensor calibration must be performed.*
- *No calibration is needed when using continuous media.*

1. Open the media sensor cover on the bottom side of the printer and loosen the screws.
2. Move the media sensor to the appropriate position. See Figure 2-22.
3. Fix the screws back and put back the media sensor cover.

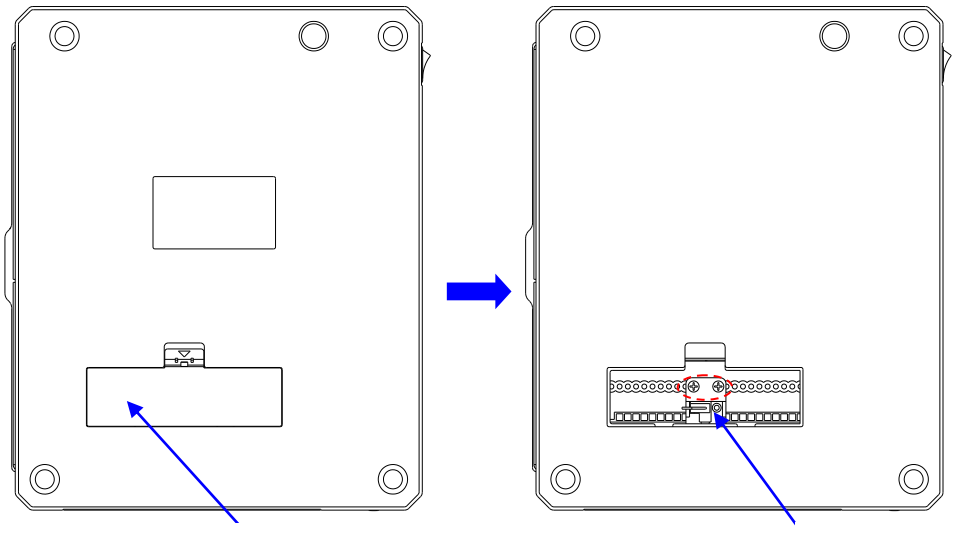

Figure 2-22 Change the Reflective Media Sensor Position

NOTE

- *Technically, the Transmissive Sensor is designed to detect a gap, hole or notch between labels, the Reflective Sensor is for detecting black marks. However, in many cases, the Reflective Sensor also can be used to detect gap, hole or notch. When choose Reflective Sensor to detect*

gap between labels, please refer to Figure 2-23(a) (b) (c) to adjust the position of the sensor for different media types as shown, the sensor shall be placed between the dotted lines.

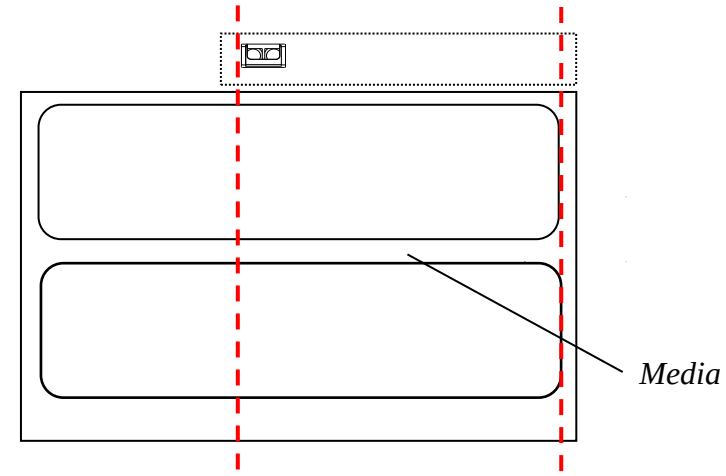

(a)

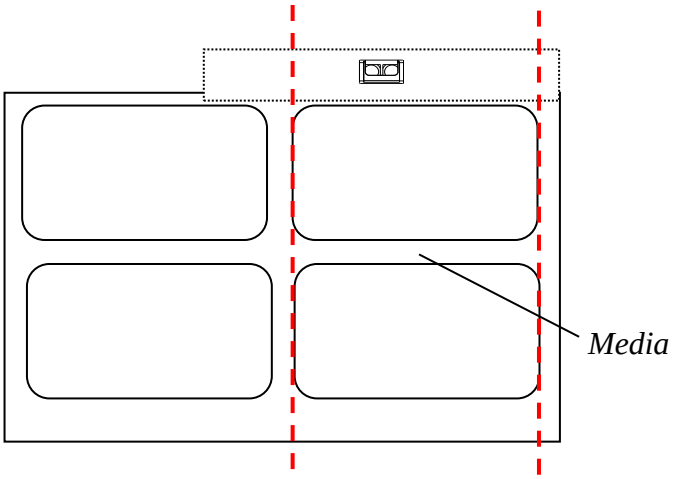

(b)

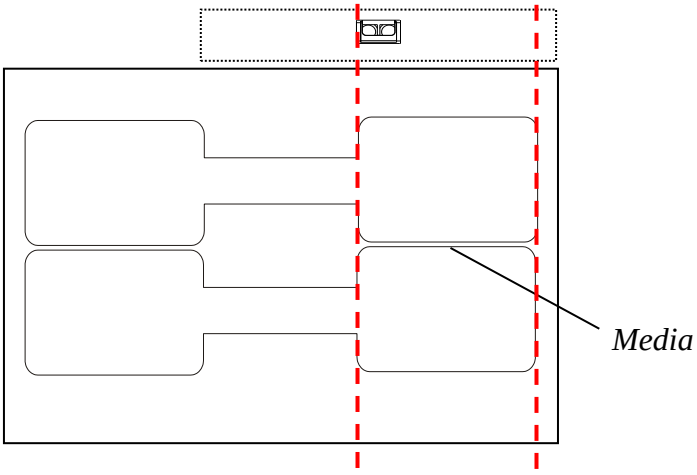

(c)

Figure 2-23 Media Sensor Position

- *When media rolls are produced, the media end would be fixed to the media core with duct tape or scotch tape. If your printer cannot detect the Media Out signal well, please refer to Figure 2-24 to check the position of the tape.*

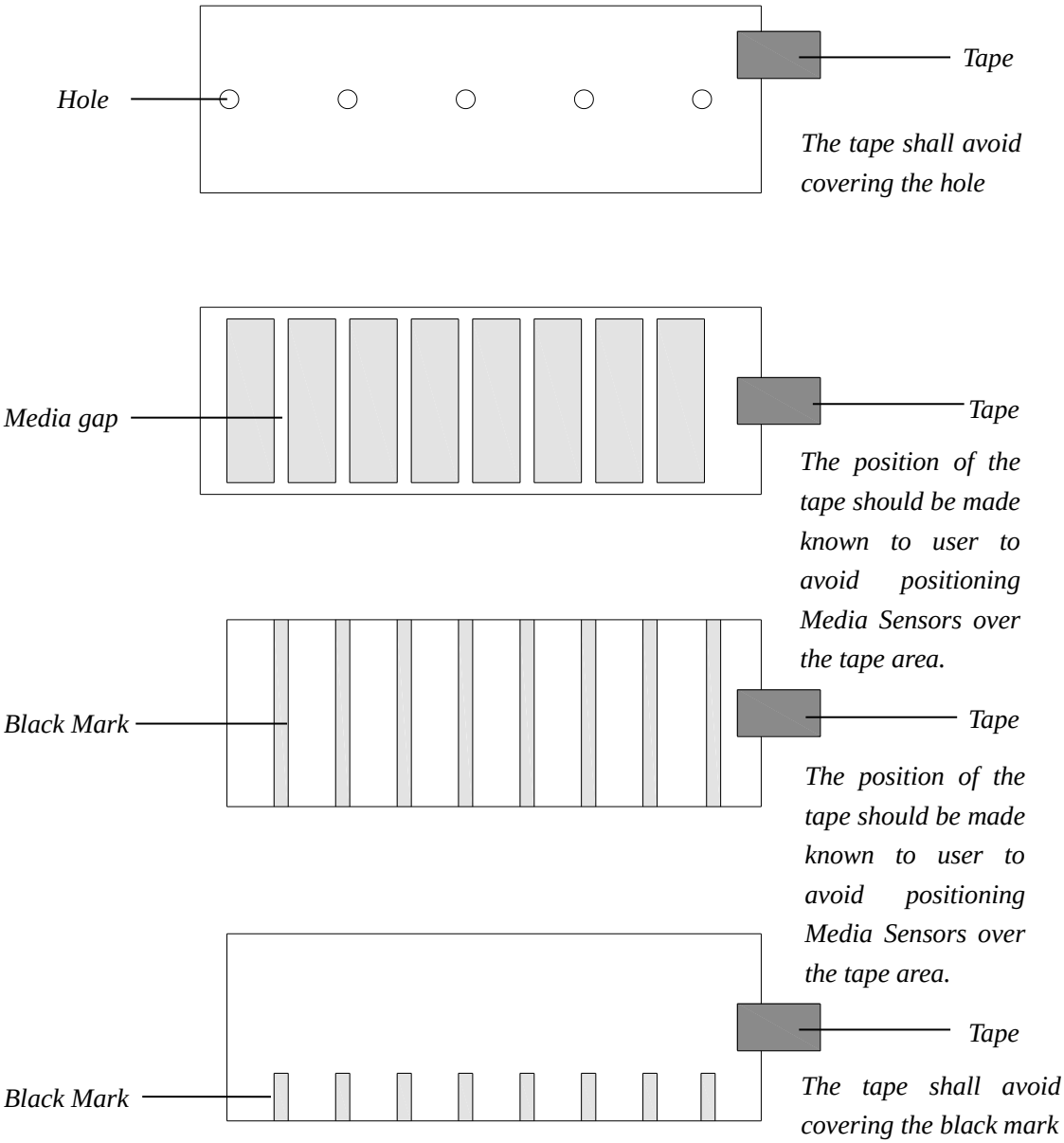

Figure 2-24 End-fixing Tape Position

4. Press and hold the [FEED/Calibration] button for 4 seconds, the printer will automatically feed labels and the media sensor calibration is done.

2.4 Installing the Printer Driver

2.4.1 USB Port Installation

CAUTION

If you have installed the POSTEK printer driver on the computer before, when an additional printer is connected to the computer and powered on, the printer driver for the additional printer will be installed automatically.

When installing the POSTEK printer driver for the first time, if you connect the printer to your computer via the USB port, please refer to the steps below to complete the printer driver installation (Windows10 operating system for example).

1. Connect the printer to your computer using a USB cord, then power on the printer.
2. Visit the POSTEK website: http://www.postekchina.com and download the printer driver.
3. Double-click the printer driver icon to bring up the "License Agreement" screen. Select "I accept the Items in the license agreement", then click "Next", as shown in Figure 2-25.

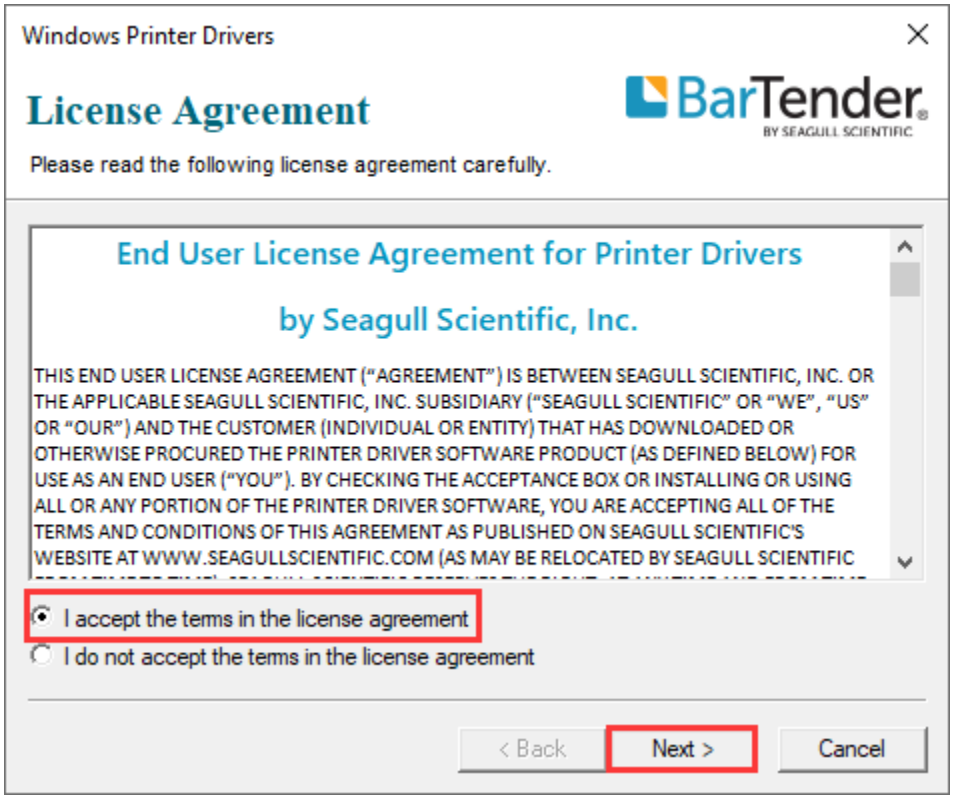

Figure 2-25 License Agreement Screen

4. The "Installation Directory" screen displays. Click "Browse…" and select where the files will be installed, then click "Next", as shown in Figure 2-26.

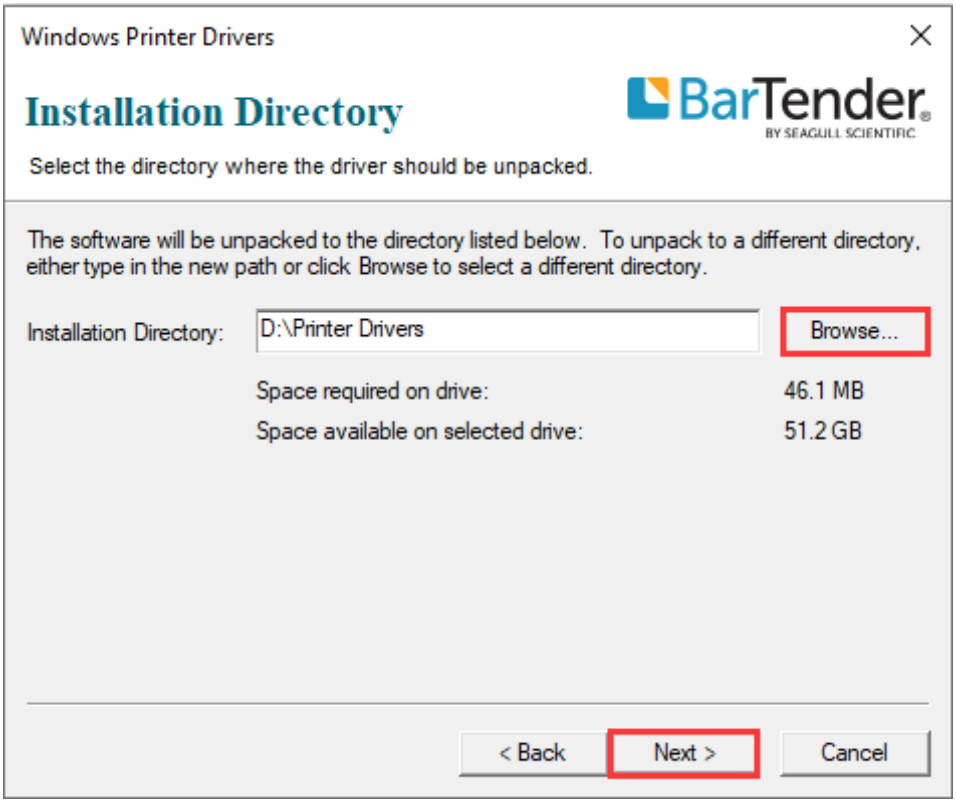

Figure 2-26 Installation Directory Screen

5. On the "Installation Information" screen, check the box that says "Run Driver Wizard after unpacking drivers", then click "Finish", as shown in Figure 2-27.

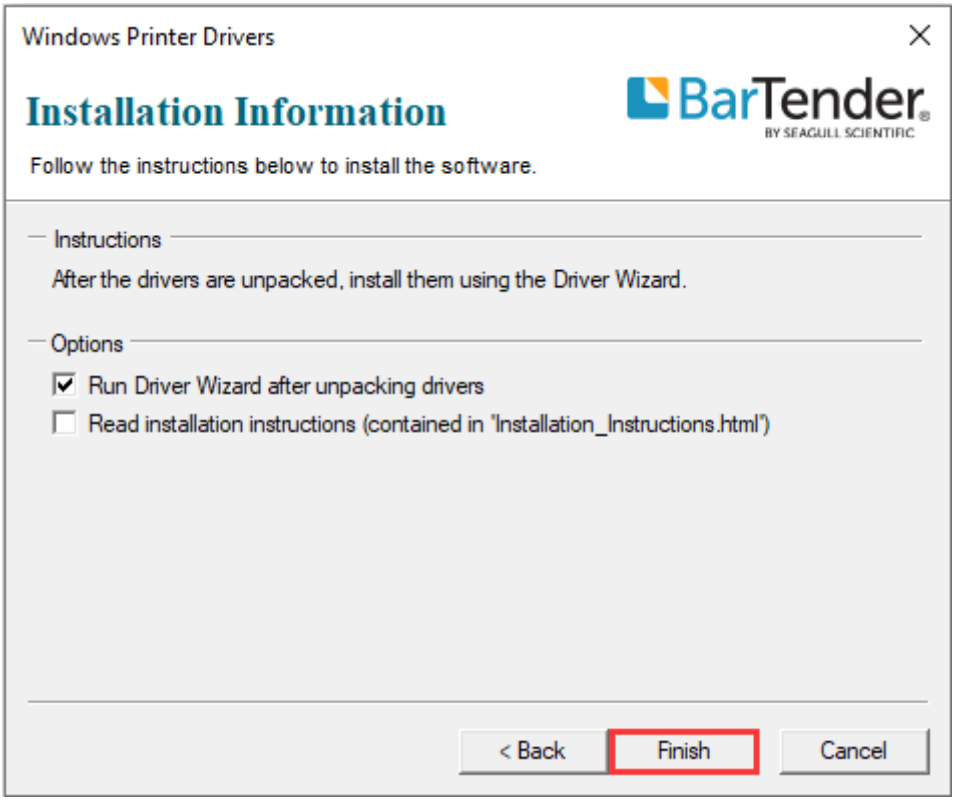

Figure 2-27 Installation Information Screen

6. On the "Seagull Driver Wizard" screen, select "Install printer drivers", and then click "Next", as shown in Figure 2-28.

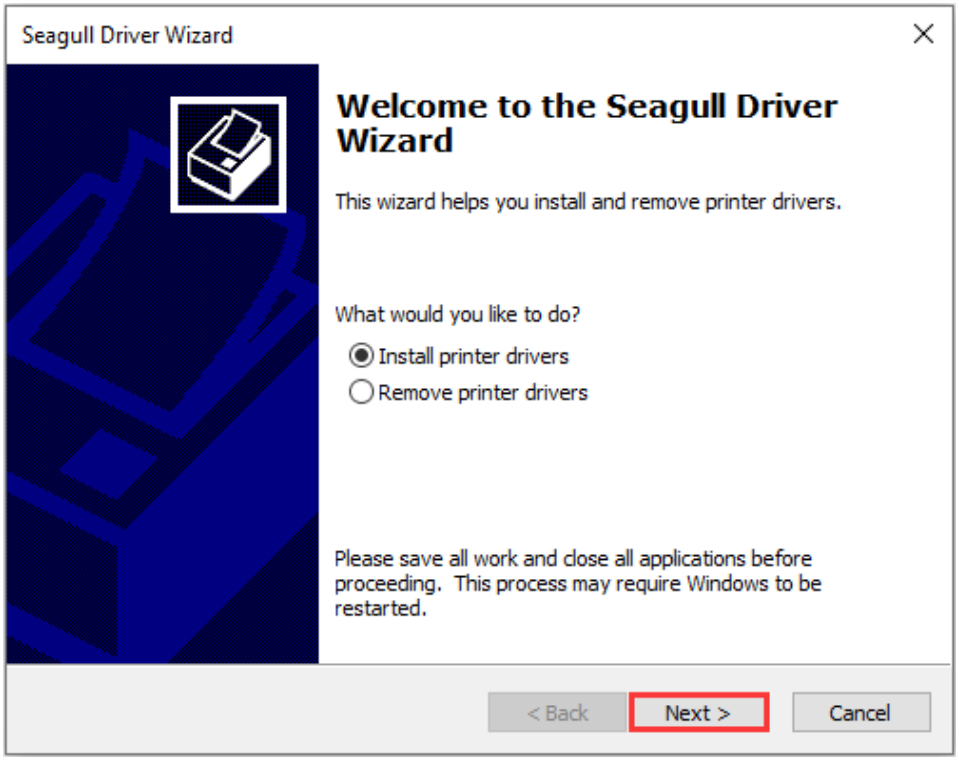

Figure 2-28 Seagull Driver Wizard Screen

7. The connected printer will be detected (POSTEK iQ Series for example), click "Next", as shown in Figure 2-29.

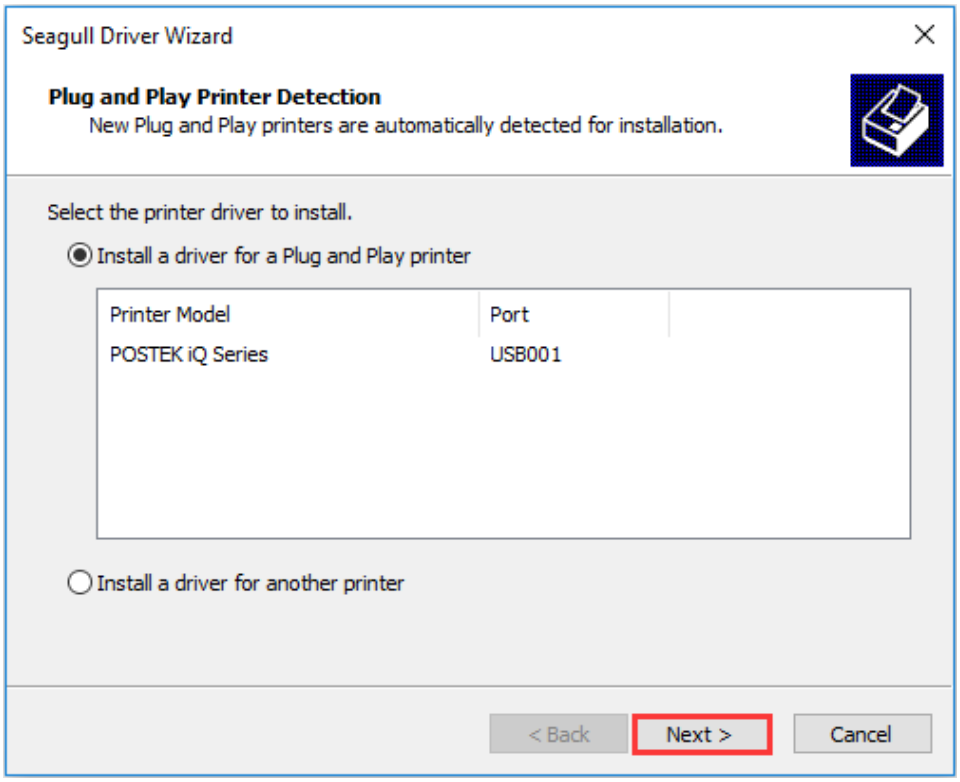

Figure 2-29 Printer Detected

8. On the "Specify Printer Name" screen, enter a name for the printer, as shown in Figure 2-30, then click "Next" to finish the driver installation.

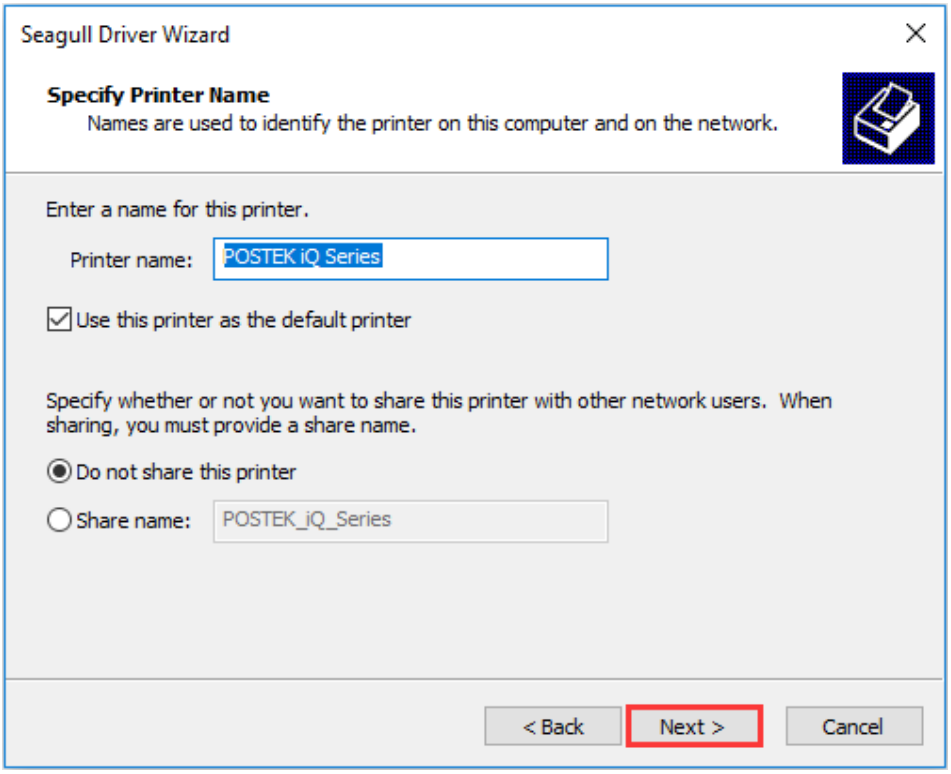

Figure 2-30 Specify Printer Name

9. Print a test page to see whether the printer is connected properly, as shown in Figure 2-31.

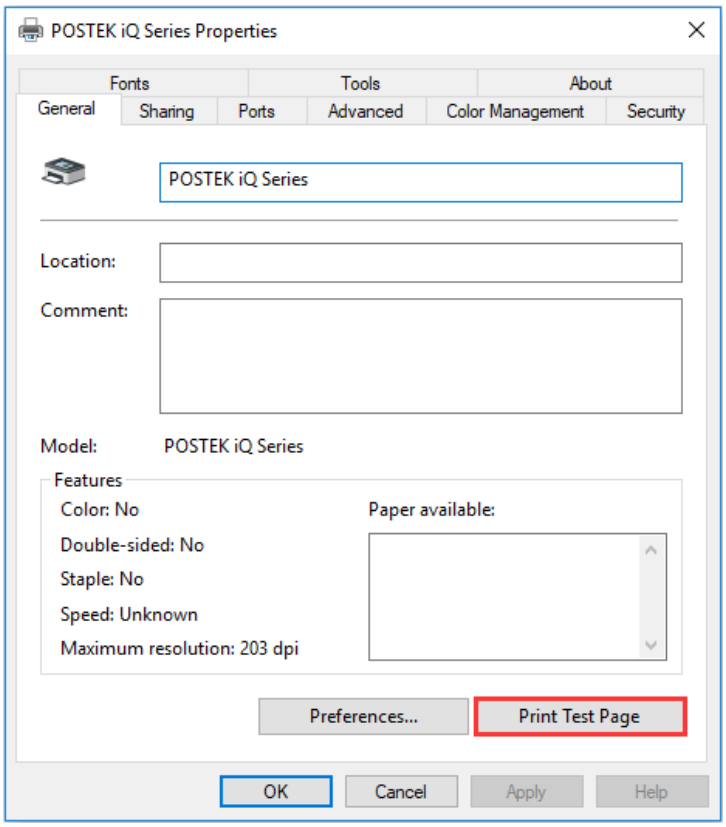

Figure 2-31 Print Test Page

2.4.2 Network Port Installation

If you connect the printer to your computer through WLAN, you will need to configure the printer's network parameters first, and then install the printer driver and configure the printer port information.

2.4.2.1 Wireless Network Configuration

You can configure the printer's wireless network parameters through Utility software. The steps are as follows:

1. Connect the printer to your computer using a USB cord, then power on the printer.
2. Visit the POSTEK website: http://www.postekchina.com and download the Utility software.
3. Open the Utility software and click "Network", as shown in Figure 2-32.

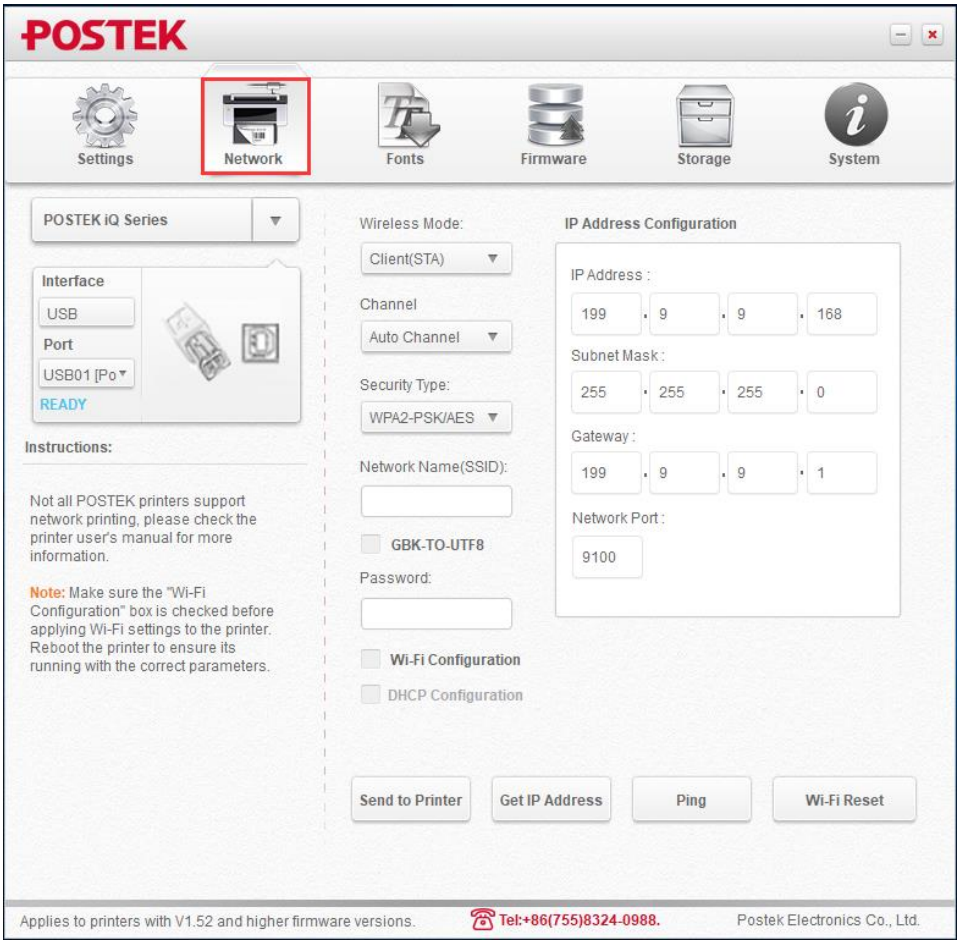

Figure 2-32 Open the Utility

4. Enter the wireless mode, channel, security type, network name (SSID), password and IP address, then click "Wi-Fi Configuration", as shown in Figure 2-33.

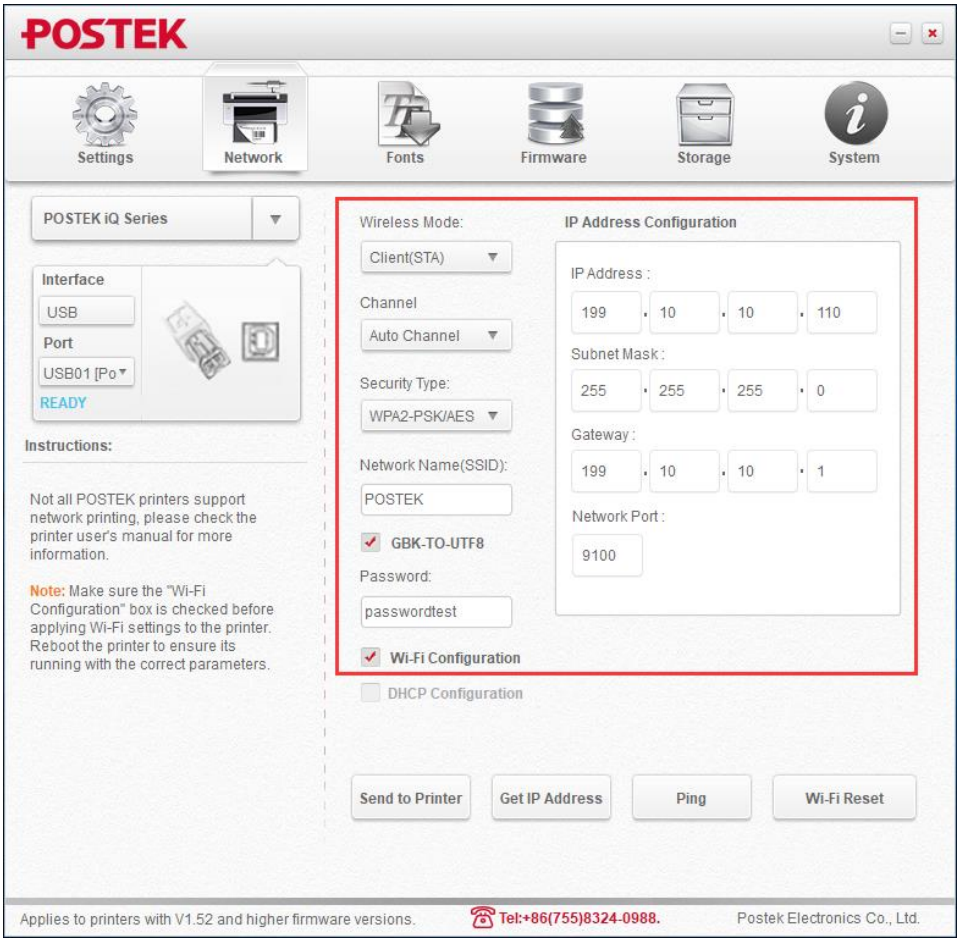

Figure 2-33 Wireless Network Configuration

Table 2-7 Items Description

Items	Description
Wireless Mode	Set the wireless mode. The default value is Server (AP). • Client (STA): The STA mode enable printer to connect to the WLAN created by wireless router via wireless access, which is regarded as a device within the WLAN group and can be accessed by other devices that connected to this WLAN. • Server (AP): The AP mode creates a wireless network that provides wireless access for other mobile devices with Wi-Fi function (such as laptop, taplet PC and smartphone) to connect to the printer directly.
Channel	Not necessary to change.
Security Type	Set the security type. • Client (STA): Needs to be set according to actual WLAN. • Server (AP): Not necessary to change.
Network Name (SSID)	Set the network name. • Client (STA): Needs to be set according to actual WLAN. • Server (AP): Not necessary to change.
GBK-TO-UTF8	Not necessary to change.
Password	Set the password.

Items	Description
	• Client (STA): Password for WLAN. • Server (AP): Password for other mobile devices to connect to the printer.
IP Address Configuration	Set the IP Address of the printer. • Client (STA): Set it on the same network segment as the WLAN. The last figure of the IP address should be unique in the network group. • Server (AP): Not necessary to change.
Wi-Fi Configuration	Check it before "Send to Printer".
DHCP Configuration	It is available when the box of "Wi-Fi Configuration" is checked. The IP address, subnet mask and gateway are not available for configuration once DHCP is enabled.

5. Click "Send to Printer", the printer will restart after a few seconds. You can check whether the configuration is successful or not through printing the configuration information.

   NOTE

   If WiFi configuration is not successful, please check and confirm that the network name, password, subnet mask and gateway are correct, and that the IP address is not occupied.

2.4.2.2 Driver Installation and Port Configuration

After configuring the printer's network parameters, please refer to the following steps to complete the driver installation and port configuration.

1. Visit the POSTEK website: http://www.postekchina.com and download the printer driver.
2. Double-click the printer driver icon, follow the prompted screen to extract the driver installer and run the driver installation wizard (for details, please refer to Steps 3~6 in 2.4.1 USB Port Installation).
3. On the "Connect Printer" screen, select "Network (Ethernet or WiFi)", and then click "Next", as shown in Figure 2-34.

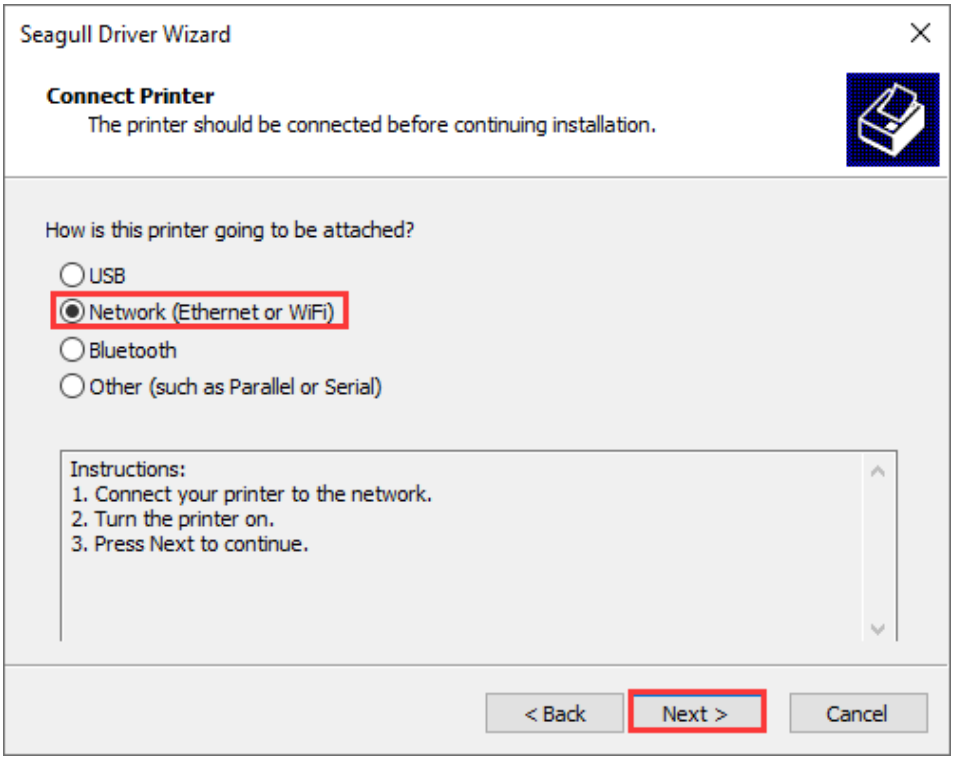

Figure 2-34 Connect Printer Screen

4. The "Specify Printer Model" screen displays, select the printer model (POSTEK iQ Series for example), and click "Next", as shown in Figure 2-35.

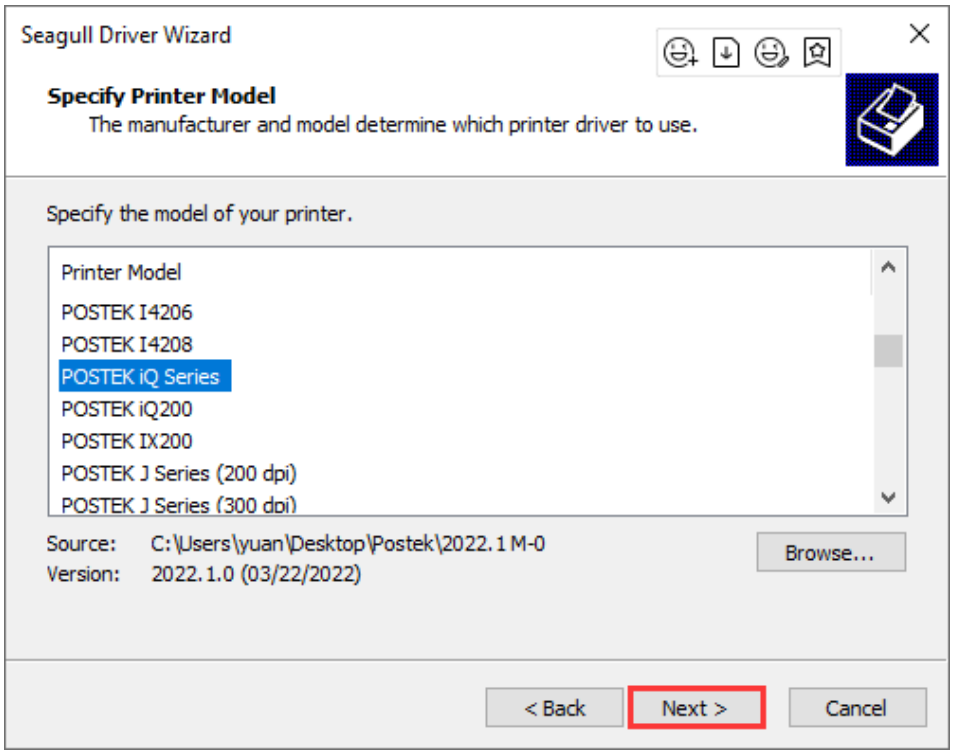

Figure 2-35 Specify Printer Model Screen

5. On the "Specify Port" screen, click "Create Port…" to bring up "Create Port" dialog box, select "Standard TCP/IP Port" - "New Port…", as shown in Figure 2-36.

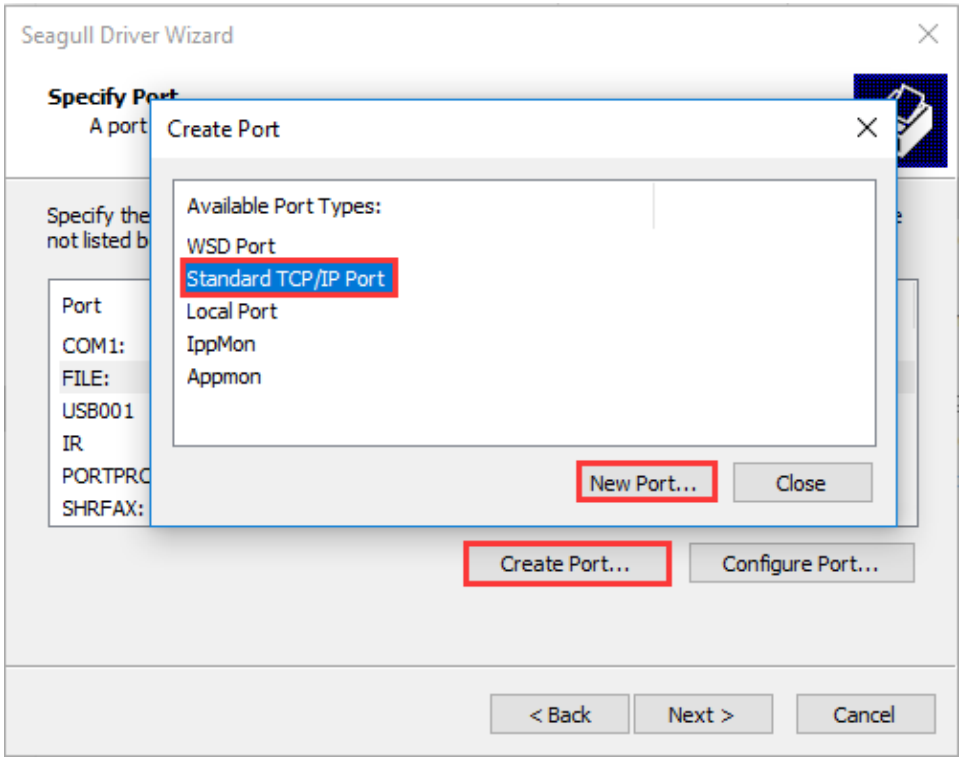

Figure 2-36 Create Port

6. The "Add Standard TCP/IP Printer Port Wizard" screen displays, click "Next", as shown in Figure 2-37.

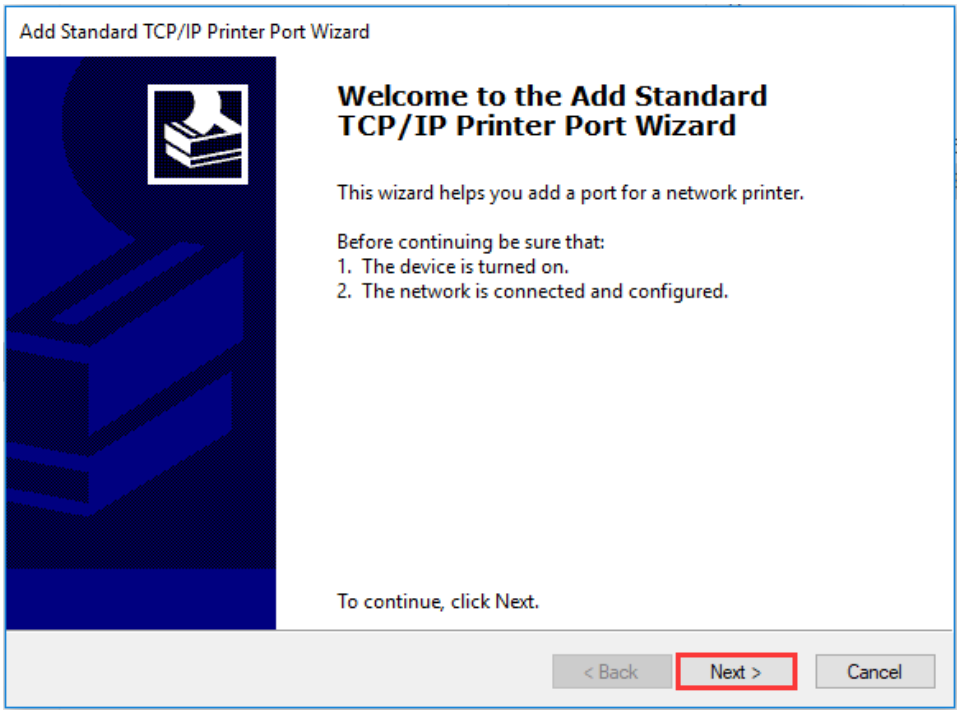

Figure 2-37 Add Standard TCP/IP Printer Port Wizard

7. On the "Add Port" screen, enter the IP Address of the printer (Note: the IP address here must be consistent with the IP address of the printer that has been set, and the port name will be generated automatically), and then click "Next", as shown in Figure 2-38.

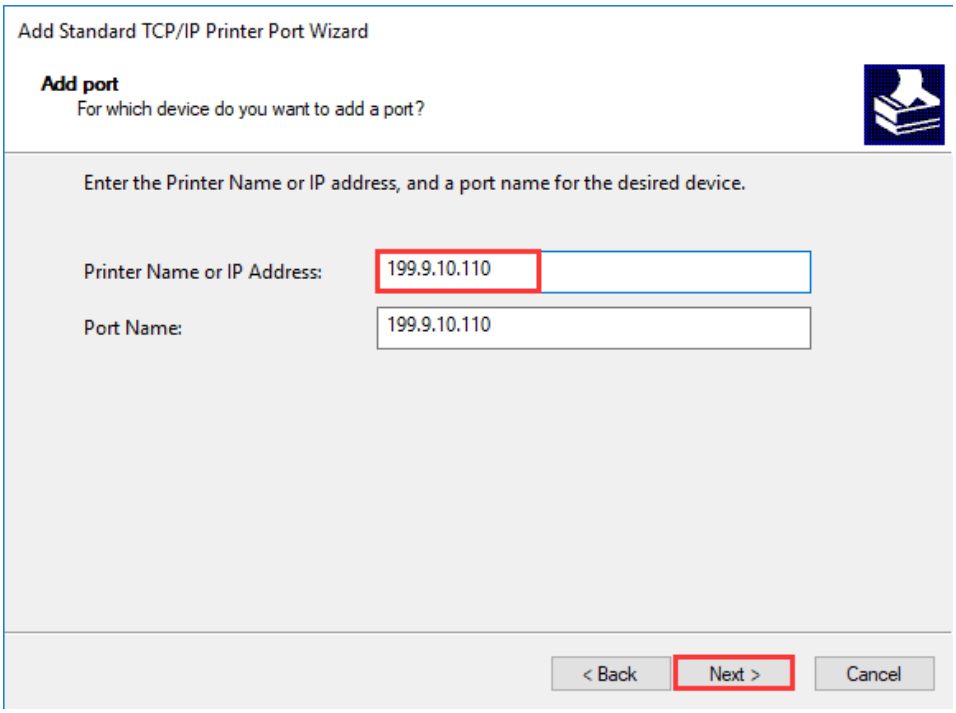

Figure 2-38 Add Port Screen

8. Windows will automatically detect the TCP/IP port. Click "Finish" to complete adding Standard TCP/IP Printer Port, as shown in Figure 2-39.

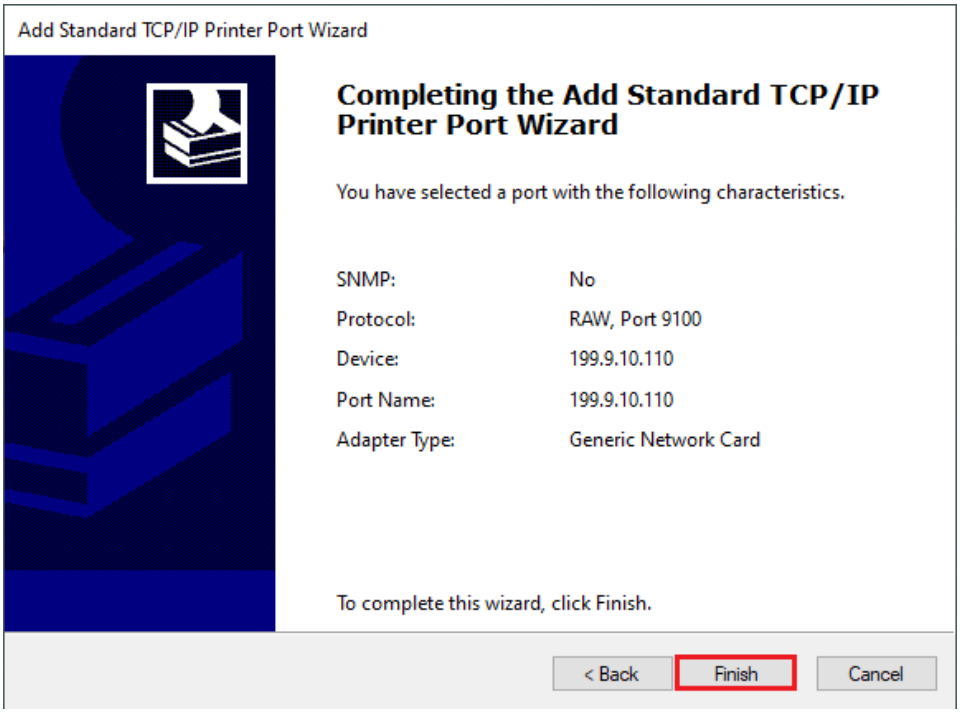

Figure 2-39 Complete adding Standard TCP/IP Printer Port

9. Return to the "Specify Port" screen, select the TCP/IP Port that has been added, and click "Next", as shown in Figure 2-40.

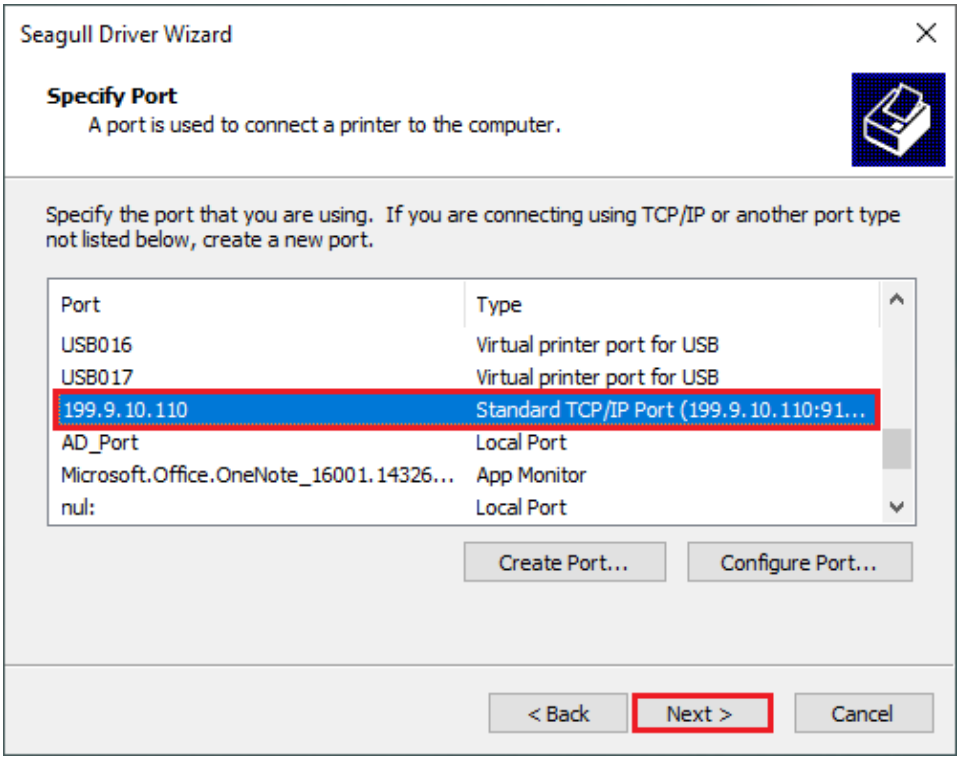

Figure 2-40 Specify Port Screen

10. On the "Specify Printer Name" screen, enter a name for the printer, as shown in Figure 2-41. Click "Next" to complete the driver installation.

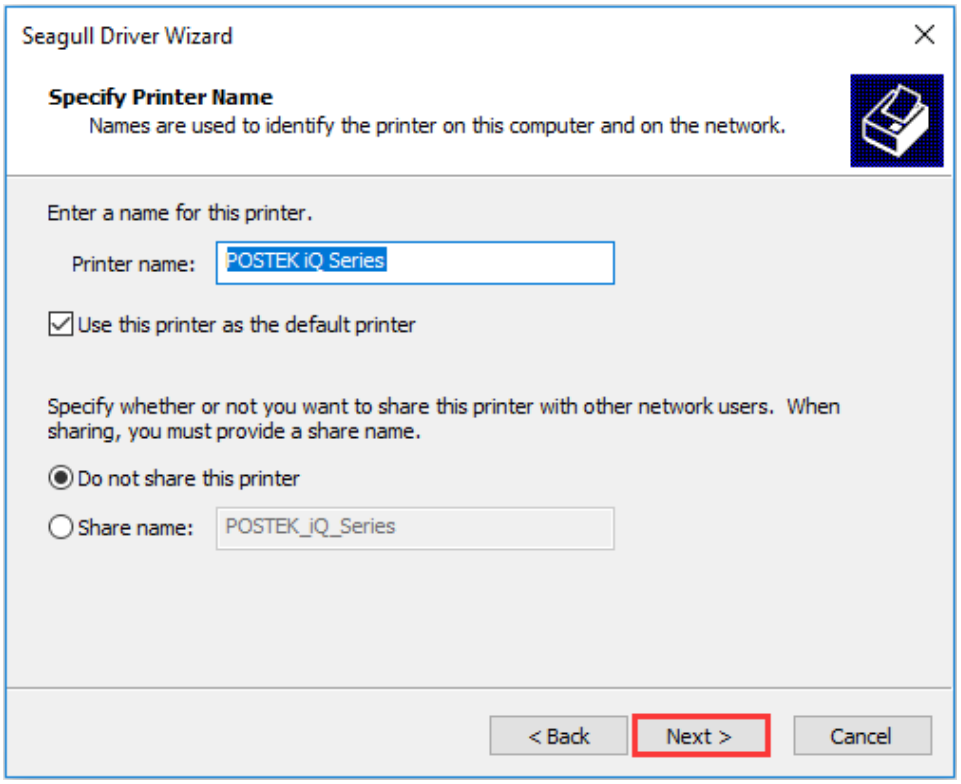

Figure 2-41 Specify Printer Name

11. Print a test page to see whether the printer is connected properly. As shown in Figure 2-42.

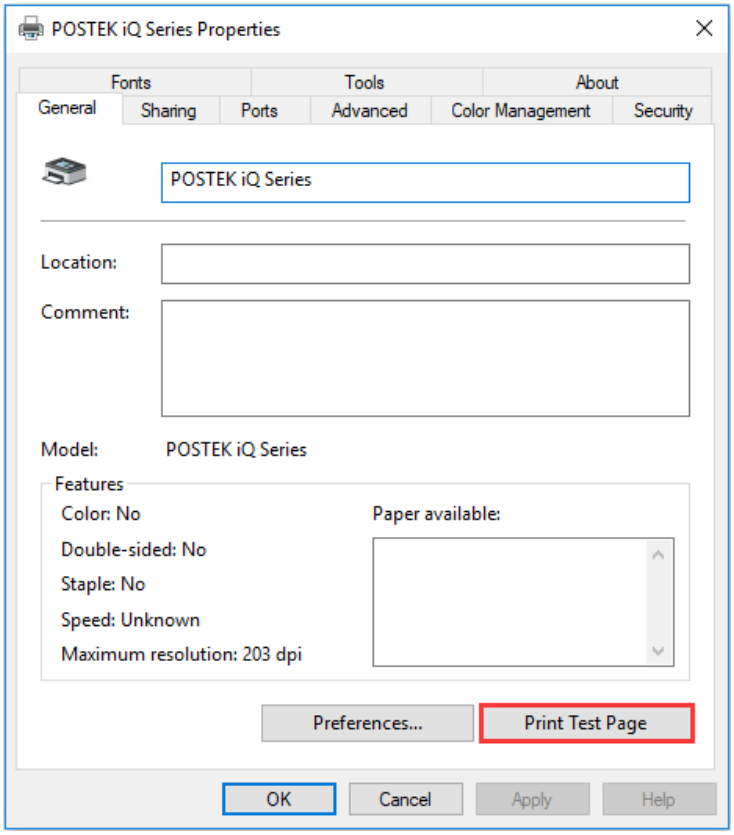

Figure 2-42 Print Test Page

2.5 Installing Label Editing Software

Each printer also comes with a BarTender UltraLite edition software. To access to the software and the directions for use, please scan the QR code on the Quick Start Guide or visit POSTEK website: http://www.postekchina.com.

Chapter 3: Maintenance

WARNING

- *Make sure the printer is powered off before performing maintenance operations.*
- *The Printhead may be hot due to recent printing. Wait until the Printhead cools before performing maintenance.*
- *Use only anhydrous isopropyl alcohol to clean the print head.*

3.1 Cleaning the Printhead

Due to the Printhead's functionality in the printer, it comes into contact with consumables and therefore is susceptible to dirt accumulation. If dirt is not removed, the Printhead may be damaged. To ensure longevity of the Printhead, follow the recommended maintenance guidelines below:

Clean the Printhead after every (3) rolls of label media use. To clean the Printhead:

1. Turn off the printer.
2. Lift the right cover.
3. Lift the Handle of the Printhead.
4. Use a cotton swab dipped in anhydrous isopropyl alcohol. Wipe the Printhead from end to end.
5. Allow a few seconds for the Printhead dry before using the printer again.

3.2 Cleaning the Platen Roller

The roller can accumulate debris from consumables, such as dirt, sand, dust or glue. To ensure longevity of the Platen Roller, follow the recommended maintenance guidelines below:

Clean the Platen Roller after every (3) rolls of label media used. To clean the Platen Roller:

1. Turn off the printer.
2. Lift the right cover.
3. Lift the Handle of the Printhead.
4. Remove the media.
5. Use a cotton swab dipped in anhydrous isopropyl alcohol. Rub the swab along the Platen Roller from end to end while rotating the roller until the swab no longer accumulates debris.

3.3 Cleaning the Printer Interior

Over time, the printer's interior may collect dust or debris from the consumables. It is advised to periodically clean the printer's interior in order to prevent the accumulated debris from damaging internal parts.

To clean the printer interior, use a cotton swabs dipped into anhydrous isopropyl alcohol and remove any debris.

3.4 Cleaning the Sensors

Over time, dust and debris will accumulate over the sensors and affect their performance, to ensure proper detection, please clean the sensors with cotton swabs dipped into anhydrous isopropyl alcohol periodically.

Chapter 4: Troubleshooting

Occasionally situations occur that require some troubleshooting. Possible issues and potential solutions are listed in this section. While not every situation is addressed, you may find some of these tips useful.

4.1 LED Error Indications

Typically, when the printer is not functioning, one or two indicators will begin blinking. The possible situations addressed by the status of the indicators are listed in Table 4-1.

Table 4-1 LED Error Indications

Indication	Possible Cause	Solutions	Important Notice
[READY] and [MEDIA] indicators blink simultaneously	Media sensor can't detect media	• Check and confirm the media has been loaded correctly (Please refer to 2.3.3 Loading the Media) • Check the position of the media sensor and confirm it could detect the media gap, hole, notch or black mark	If the media being used is continuous media (no locator present on the label). Then please set the media to Continuous Media in the printer driver settings.
	Media ran out	Load a new roll of media	If the printer has not been powered off and the print job has not been finished, after clearing the error: • Press [FEED/Calibration] button, the printer would reprint the previous label and then continue with the print job. • Press [CANCEL/Reset] button, the printer would resume the print job. • Press and hold the [CANCEL/Reset] button, the print job would be canceled.
	Media jammed	Clear the jam	
	The Media Roll Guides are not firmly pushed against the Media or have not been installed.	Install the Media Roll Guides correctly and push them firmly against the media.	
	Media sensor is dirty	Clean the Media sensor	
	Media sensor is out of order	Contact an authorized POSTEK service provider for technical support.	

Indication	Possible Cause	Solutions	Important Notice
Only [READY] indicator blinks	The printer is in a paused state	Press the [PAUSE/Self Test] button to resume.	
	Cutter error	Please check whether the cutter is installed correctly, for details, please contact an authorized POSTEK service provider for technical support.	

4.2 Miscellaneous Issues

Table 4-2 identifies miscellaneous issues with the printer, the possible causes, and the recommended solutions.

Table 4-2 Miscellaneous Printer Issues

Problem	Possible Cause	Recommended Solution
Vertical Blank Lines Appear	Printhead is dirty.	Clean the Printhead. Follow the recommended maintenance guidelines for cleaning the Printhead.
Data Sent but Not Printing	The driver is incorrect.	Ensure the correct driver is chosen in the label software.
	Memory overflow	Reset the printer.
Poor Printing Quality	The printing parameters are set inappropriately.	• Adjust print darkness setting value. • Adjust print speed setting value.
	Printhead is dirty.	Clean the Printhead. Follow the recommended maintenance guidelines for cleaning the Printhead.
	Poor quality consumables	Change to higher-quality consumables.

NOTE

For errors not listed here, please contact an authorized POSTEK Service Provider for further assistance.

Appendix A: Interface Specifications

The RS232 connector on the printer is a DB9F:

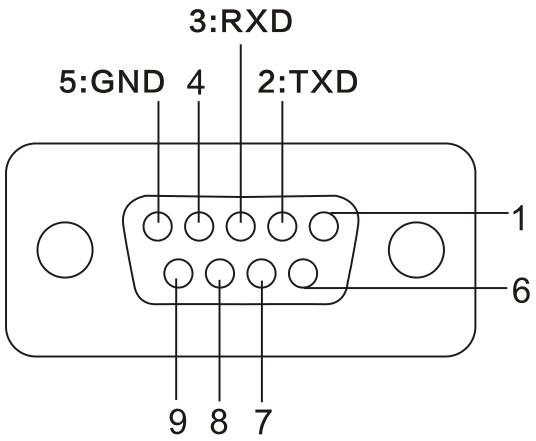

Number	Description	Definition
1	/	/
2	Out	TX
3	In	RX
4	/	/
5	-	Ground
6	/	/
7	/	/
8	/	/
9	/	/

Baud rate: 9600, 19200, 38400, 57600
Data format: 8 data bits, 1 start bit or 1 stop bit.
Flow control: None. If you are using software or drivers under the Windows environment, the flow control must be set to “hardware.”

Any communications port can transmit data from the host (RS232, Ethernet, or USB). Preliminary communications settings are not required since the printer will automatically detect which port is active.

CAUTION

Never send data from 2 ports at the same time. Data cannot be sent to more than one port simultaneously or data corruption and print errors may occur.

Appendix B: ASCII Table

	0	1	2	3	4	5	6	7
0	NUL			0	@	P	`	p
1	SOH	XON	!	1	A	Q	a	q
2	STX		“	2	B	R	b	r
3		XOFF	#	3	C	S	c	s
4			$	4	D	T	d	t
5		NAK	%	5	E	U	e	u
6	ACK		&	6	F	V	f	v
7	BEL		‘	7	G	W	g	w
8	BS		(	8	H	X	h	x
9			)	9	I	Y	i	y
A	LF		*	:	J	Z	j	z
B		ESC	+	;	K	[	k	{
C	FF		,	<	L	\	l	|
D	CR		-	=	M	]	m	}
E	SO	RS	.	>	N	^	n	~
F	SI	US	/	?	O	_	o	DEL
	0	**1**	**2**	**3**	**4**	**5**	**6**	**7**

NOTE

The € sign is included in the embedded table at DEC128 (HEX 80).

POSTEK

RUGGED PARTS, DURABLE MACHINES