POSTEK

RUGGED PARTS, DURABLE MACHINES

User's Manual

Industrial

Barcode Label Printer

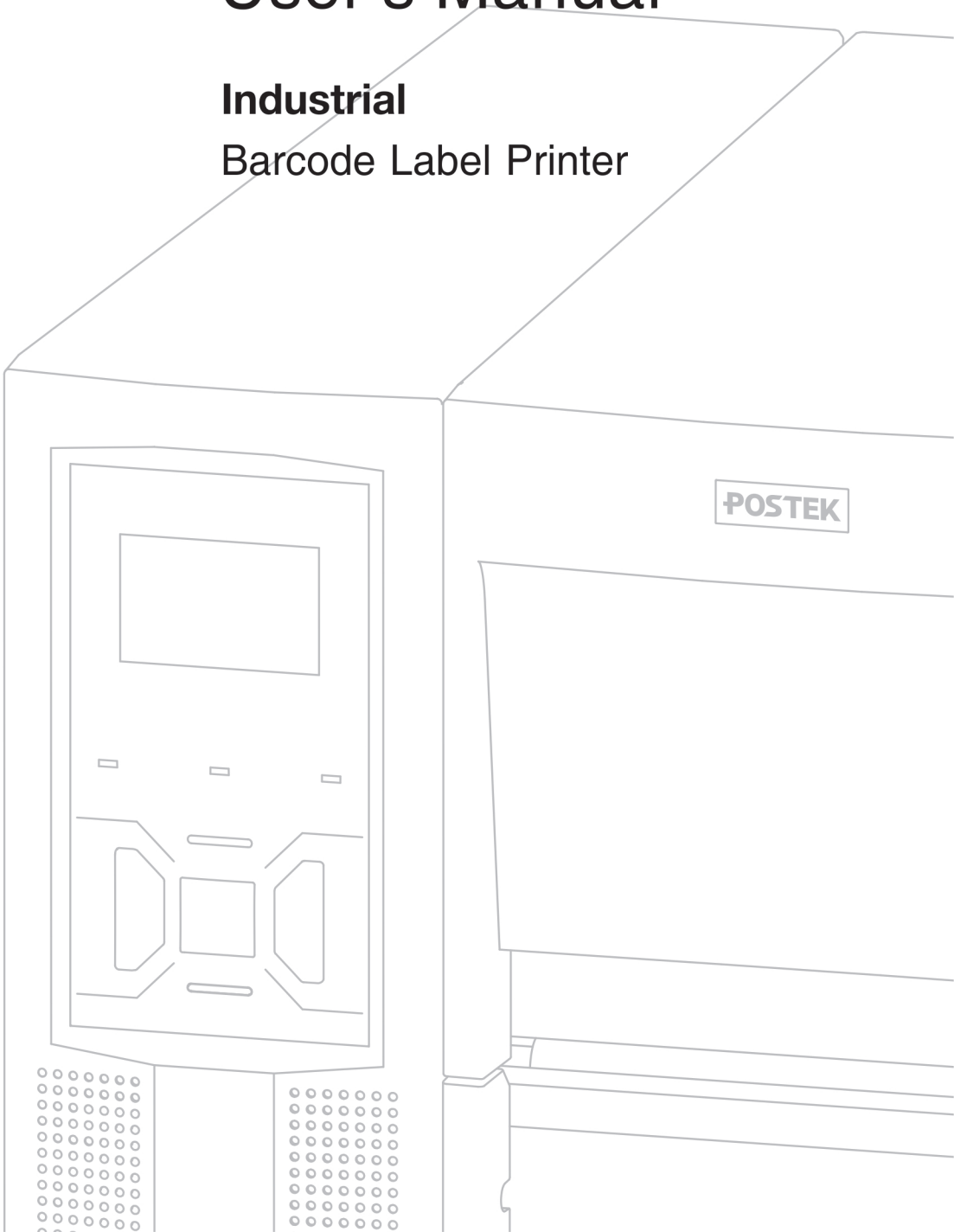

FCC Notice

This device complies with Part 15 of the FCC Rules. Operation is subject to the following two conditions: (1) this device may not cause harmful interference, and (2) this device must accept any interference received, including interference that may cause undesired operation.

This equipment may generate, use and/or radiate radio frequency energy. If not installed and used in full accordance with this User's Manual, interference to radio communications may occur. This equipment complies with the limits for a Class A Information Technology Equipment pursuant to Part 15 of the FCC Rules, which are designed to provide reasonable protection against such interference when operated in a commercial environment. Operation of this equipment in a residential area may also cause interference. In such case the user, at his/her expense, will be required to correct the interference using whatever means necessary.

Trademarks

POSTEK is a registered trademark by POSTEK Electronics Co., Ltd.
ARM is a registered trademark of Advanced RISC Machines Ltd.
Microsoft, Windows are registered trademarks of Microsoft Corporation.

Copyright

© 2022 by Postek Electronics Co., Ltd. All rights reserved. Under the copyright laws, this manual cannot be reproduced in any form without the prior written permission of POSTEK. No patent liability is assumed, with respect to the use of the information contained herein.

Disclaimer

POSTEK barcode/RFID printers are developed and produced by Postek Electronics Co., Ltd (hereinafter as "POSTEK") with the adoption of direct thermal/thermal transfer printing and RFID encoding techniques. For thermal transfer printing, matching ribbons and media are required. Meanwhile, the wide variety of RFID chip and antenna designs make it difficult to guarantee RFID tag's 100% compatibility with POSTEK printers, to satisfy your printing needs, please consult with the local reseller(s) to choose the matching consumables for POSTEK printers.

This manual has been validated and reviewed for accuracy. The instructions and descriptions it contains are accurate for the POSTEK printer at the time of this manual's distribution. However, succeeding printers and manuals are subject to change without notice. POSTEK assumes no liability for damages incurred directly or indirectly from errors, omissions or discrepancies between the printer and this manual.

To protect your interest, and to prevent loss due to improper handling, please read the corresponding user's manual before operation, and don't use the printer during abnormal conditions. In no event shall POSTEK be liable for any damage or loss caused by human misoperation, including but not limited to loss of business profits, business interruption, loss of business information, or other pecuniary loss.

Although this manual describes and details many issues which could possibly occur, the manufacturer cannot warrant against unpredictable conditions during the printer's application. For problems such as the printer not working, missed or unclear print content, etc., POSTEK and/or its resellers are

responsible for troubleshooting (according to POSTEK Warranty Clauses). In no event shall POSTEK or the resellers involved be liable for any direct or indirect loss, including but not limited to loss of business profits, business interruption, loss of business information, or other pecuniary loss.

Important Safety Instructions

- Only qualified and trained service technicians should attempt to repair the printer.
- Do not place the printer on or near a heat source.
- Be sure that your power source matches the rating listed on the regulatory label on the back of the printer. Be certain your power source is grounded.
- To avoid getting an electric shock, do not use a worn or damaged power cord. If the power cord becomes damaged or frayed, replace it immediately.
- Do not insert anything into the ventilation slots or openings on the printer.
- The printer should never be operated in a location where it can get wet. Personal injury may result.
- The printhead becomes hot while printing. To protect from damaging the printhead and risk of personal injury, avoid touching the printhead.
- To get increased printhead longevity and higher quality printouts, always use approved labels, tags and thermal transfer ribbons. Approved supplies can be ordered from your Postek authorized reseller.
- Static electricity that accumulates on the surface of the human body or other surfaces can damage or destroy the printhead or electronic components in this device. DO NOT touch the printhead or the electronic components with bare hands.
- Place the printer on a flat, firm, solid surface.
- Never operate in a high temperature environment.
- Turn off the power when not in use for extended periods.
- Follow all recommendations and setup instructions included in this manual.

Contents

Preface **1**

Important Notes **2**

Chapter 1: Introduction **4**

1.1 Specifications 4
1.2 Contents in the Box 5

Chapter 2: Setup and Use **6**

2.1 Main Parts and Structures 6
2.1.1 Front View 6
2.1.2 Interior View 7
2.1.3 Rear View 8
2.1.4 Consumables Loading Path 9
2.2 Setting up the Printer 10
2.2.1 Interface Connection 10
2.2.2 Connecting the Printer 10
2.2.3 Loading the Ribbon 11
2.2.4 Loading the Media 15
2.3 Installing the Printer Driver 23
2.3.1 USB Port Installation 23
2.3.2 Network Port Installation 27
2.4 Installing Label Editing Software 38

Chapter 3: Operations and Settings **39**

3.1 Basic Operations 39
3.1.1 Power Switch 39
3.1.2 The Front Panel 39
3.1.3 Advanced Functions 42
3.2 Setting Menu 43
3.2.1 Button functions 43
3.2.2 Main menu 43
3.3 Mechanical Adjustments 48
3.3.1 Adjusting the Media Sensor 48
3.3.2 Adjusting the Printhead Pressure and Balance 50
3.3.3 Adjusting the Ribbon Tension 51

Chapter 4: Maintenance **52**

4.1 Cleaning the Printhead 52
4.2 Cleaning the Platen Roller 52
4.3 Cleaning the Printer Interior 52
4.4 Cleaning the Sensors 53

Chapter 5: Troubleshooting **54**

5.1 LCD Error Messages 54
5.2 LED Error Indications 56
5.3 Miscellaneous Issues 57

Appendix A: Interface Specifications **59**

Appendix B: ASCII Table **60**

Preface

Your POSTEK high performance industrial barcode label printer features innovative state-of-the-art technology and superior quality workmanship. Boasting an all metal frame and unique core construction, it achieves a sturdy and durable stationary platform for smooth printing. A powerful control system can easily handle the most complicated printing requirements, and advanced thermal transfer/direct thermal technology offers optimum printout clarity.

This manual explains how to set up and begin using your printer. It also provides detailed information on configuring your printer, basic operations, care and troubleshooting.

Please read this manual carefully before using the POSTEK printer.

Symbol Conventions

The symbols that may be found in this document are defined as follows.

Symbol	Description
WARNING	Alerts you to a medium or low risk hazard that could, if not avoided, result in moderate or minor injury.
CAUTION	Alerts you to a potentially hazardous situation that could, if not avoided, result in equipment damage, data loss, performance deterioration, or unanticipated results.
NOTE	Provides additional information to emphasize or supplement important points in the main text.

Version

Version 1.3, published in July, 2022.

Important Notes

Please read the following passages thoroughly before proceeding.

Printhead

The thermal printhead can be easily damaged due to its precision construction. A printhead damaged by misuse is not covered under the terms of the warranty. To ensure longevity of the printhead, please note the following:

- DO NOT scrape or use tools that might damage the printhead surface.
- To protect from corroding the printhead, DO NOT touch the printhead with bare hands.
- DO NOT use thermal paper or thermal transfer ribbons which contain Na, K or Cl elements.
- Keep printhead from any form of liquid or dampness.
- Only use a cotton swab dipped in anhydrous isopropyl alcohol to clean the printhead.
- Always use high-quality consumables:
  - When the printhead module is closed, pressure is placed directly onto the printhead; dirt such as paper scraps, sand, dust and glue can scrape or damage the printhead.
  - The printhead is also easily damaged by static electricity, which may be generated by poor quality ribbons.
- Always inspect consumables for high quality before purchasing.

CAUTION

The printer functions under Direct Thermal or Thermal Transfer print modes. Thermal Transfer is set as the factory default (requires ribbon for printing). However, if you need to print on Direct Thermal materials (ribbon is not required), please contact your printer supplier or service provider to reduce the printhead pressure. This can protect your printhead from early performance deterioration due to direct contact with the thermal media. Any physical printhead damage caused by direct thermal printing is not covered under warranty.

Cutter (Optional)

The printer equipped with a cutter can automatically cut the label after printing. However, automatic cutters pose a safety hazard since the blades are very sharp. To prevent injuries and cutter failures while using one of the many types of automatic cutters, please follow the safety and maintenance rules listed below:

- Before using the cutter, be sure you have been trained by a qualified individual. A written procedure covering the cutter's use is recommended.
- It is very important to choose the right cutter model for the application to ensure personal safety and prevent damage to the cutter caused by cutting wrong types of media.
- Keep loose items such as long hair, clothing, jewelry, away from the cutter.
- Don't put anything except print media inside the cutter.
- Turn off power of printer if you notice abnormality with the cutting process and alert a qualified technician to resolve the issue.
- Never cut a print media which exceeds the maximum operating conditions of the cutter.
- Not every cutter model is designed to be able to cut through adhesive. Use only the dedicated cutters to cut through adhesive materials. Even so, regular cleaning is required to remove the adhesive built up on the blades over time to prevent cutter jam.
- Routine inspection and maintenance are required to be performed by a qualified technician to keep the cutter in good working conditions.

Chapter 1: Introduction

1.1 Specifications

Model by Resolution	203DPI	300DPI
Printing Method	Direct Thermal and Thermal Transfer	
Max Printing Speed	6 ips (152.4 mm/s)	6 ips (152.4 mm/s)
Max Printing Width	4.25″ (108 mm)	4.17″ (106 mm)
Max Printing Length	236″ (6000 mm)	157″ (4000 mm)
HEAT™ Level	I	I
Memory	8 MB FLASH ROM, 16 MB SDRAM	
Media	Width: 4.56″ (116 mm) max, 0.39" (10 mm) min. OD: 8″ (203.2 mm) max. ID: 1.5 (38 mm) / 3" (76.2 mm)	
Minimum Label Length	Tear-off: 0.2″ (5 mm)	
	Cutter: A150/A400: 0.79″ (20 mm)	
Media Thickness	0.0024″ ~ 0.0098″ (0.06 ~ 0.25 mm), including liner	
Ribbon	Width: 4.56″ (116 mm) max. Length: 1968' (600 m) max. OD: 3.3″ (84 mm) max. ID: 1″ (25.4 mm) Ink side: both In and Out	
Media sensor	Upper Reflective (Adjustable), Lower Reflective (Adjustable) and Transmissive (Adjustable)	
Fonts	Five built-in dot matrix ASCII fonts, user-downloadable TrueType Fonts	
Barcode Types	1D Barcode: Code 39, Code 93, Code 128/subset A,B,C, Codabar, Interleave 2 of 5, UPC A/E 2 and 5 add-on, EAN-13/8/128, UCC-128, etc. 2D Barcode: MaxiCode, PDF417, Data Matrix, QR Code, etc.	
Interfaces	RS-232 Serial, 10/100 M Adaptive Ethernet, USB DEVICE 2.0, USB HOST	
LCD display	Graphic Dot Matrix	
Power Source	100 ~ 240 V, 50/60 Hz, 3.5 A	
Weight	33.06 lbs (15 kgs)	
Dimensions	W 11.3″ (286 mm) x D 17.6″ (448 mm) x H 10.7″ (271 mm)	
Operating Environment	Temperature: 32° F ~ +104° F (0° C ~ 40° C) Relative humidity: 5% - 85% non condensing	

Model by Resolution	203DPI	300DPI
Storage Environment	Temperature: -40° F ~ +140° F (-40° C ~ 60° C) Relative humidity: 5% - 85% non condensing	
Optional Items	Centronics Parallel Port*	
	Wi-Fi, Bluetooth, Rotary Cutter, External Label Rewinder	

HEAT™, or Heating Equilibrium Adaptive Tuning, is a POSTEK designed and developed cutting-edge technology that sets the benchmark for heat management in thermal printing. Printers equipped with HEAT™ have significant improvements in their printout clarity and print speed. The HEAT™ level represents the fineness of the heating uniformity with level I being the finest.

**Factory dependent.*

1.2 Contents in the Box

Inspect the shipping carton(s) for possible shipping damage, if damage is discovered, notify the shipping company to report the nature and extent of the damage.

Please check the items according to the Packing List. If there are any items missing, notify your authorized reseller.

Chapter 2: Setup and Use

2.1 Main Parts and Structures

2.1.1 Front View

Figure 2-1 shows the front view of the printer.

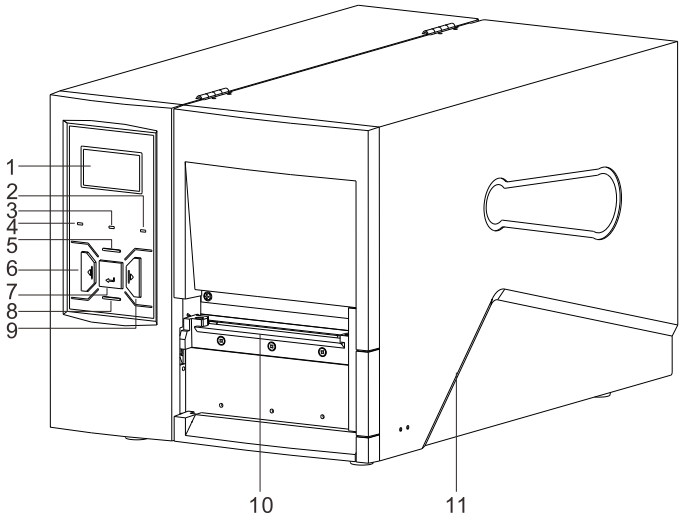

Figure 2-1 Front View

Table 2-1 Front View Description

Number	Description
1	LCD Screen
2	[RIBBON]Indicator
3	[MEDIA]Indicator
4	[READY]Indicator
5	[MEDIA CALIBRATION] Button
6	[PAUSE]Button
7	[FEED]Button
8	[MENU] Button
9	[CANCEL]Button
10	Tear-off Bar
11	Right Cover

2.1.2 Interior View

Figure 2-2 shows the interior views of the printer.

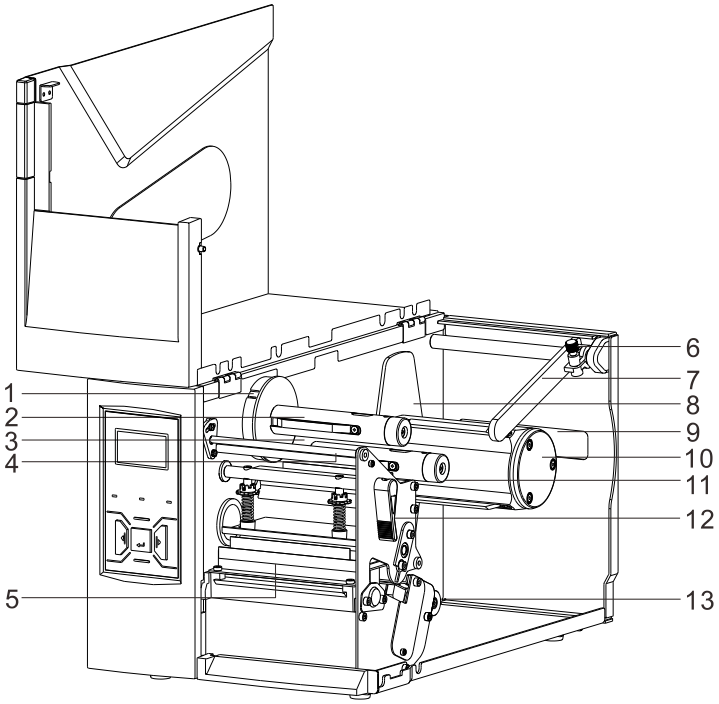

Figure 2-2 Interior View

Table 2-2 Interior View Description

Number	Description
1	Stop Plate_Ribbon Take-up Spindle
2	Ribbon Take-up Spindle
3	Stop Plate_Ribbon Supply Spindle
4	Ribbon Guide Rod
5	Printhead Assembly
6	Thumbscrew
7	Media Roll Baffle Arm
8	Stop Plate_Media Spindle
9	External Media Loading Slot
10	Media Spindle
11	Ribbon Supply Spindle
12	Lever
13	Media Guide Roller

2.1.3 Rear View

The printer is equipped with multiple interfaces. See Figure 2-3.

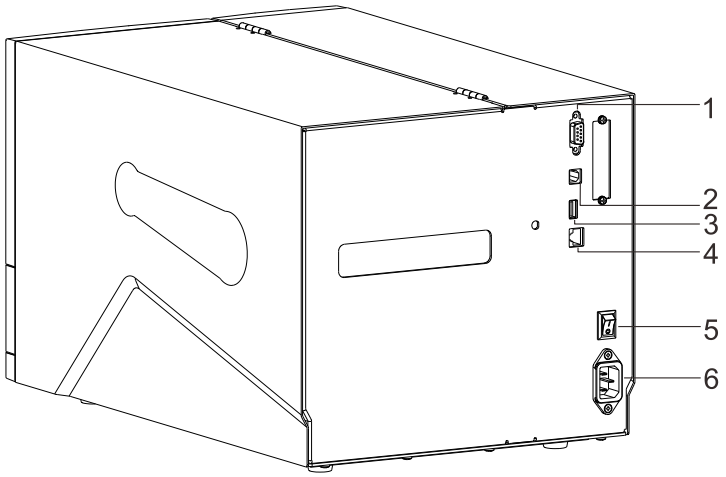

Figure 2-3 Rear View

Table 2-3 Rear View Description

Number	Description
1	RS-232 Serial Port
2	USB Device
3	USB Host
4	Ethernet Port
5	Power Switch
6	AC In Port

2.1.4 Consumables Loading Path

Figure 2-4 shows the consumables' loading paths in the printer.

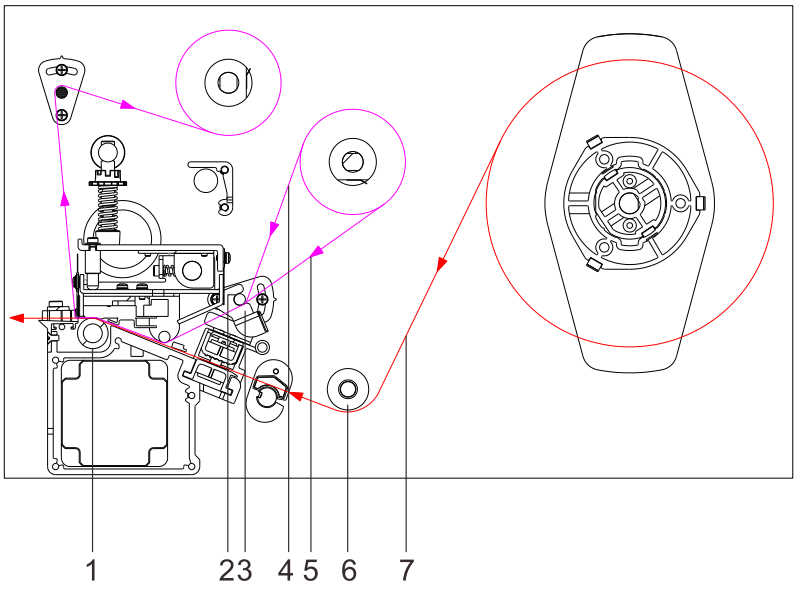

Figure 2-4 Loading Paths

Table 2-4 Loading Path Description

Number	Description
1	Platen Roller
2	Ribbon Guide Rod
3	Ribbon End Sensor
4	Ribbon Path (Ribbon-ink side in)
5	Ribbon Path (Ribbon-ink side out)
6	Media Guide Roller
7	Media Path

2.2 Setting up the Printer

2.2.1 Interface Connection

The printer supports RS-232 Serial, USB DEVICE and 10/100M Adaptive Ethernet interface connections.

To connect:

- Make sure the printer is powered OFF.
- The printer will identify the communication port automatically.
- The default values of the printer port can be obtained from the self-test report. (See 3.1.3 Advanced Functions/Obtaining Printer Configuration Information)
- Cable configurations for Serial (RS-232C) interface can be found in Appendix A: Interface Specifications.
- Please take the following measures to reduce cable noise.
  - Restrict the length of the interface cable to less than 6' (1.83 M) if possible.
  - Keep the interface cable separate from the power cords.

2.2.2 Connecting the Printer

WARNING

- *Do not use the printer near liquids or corrosive chemicals.*
- *Connecting to a wrong power source may cause damage to your printer. POSTEK assumes no liability for any damage in such cases. The rating for the printer is 110/240 VAC ±10%, 50/60 Hz.*

1. Make sure the printer is switched OFF.
2. Connect the power cord to the AC In Port on the back of the printer. See Figure 2-5.

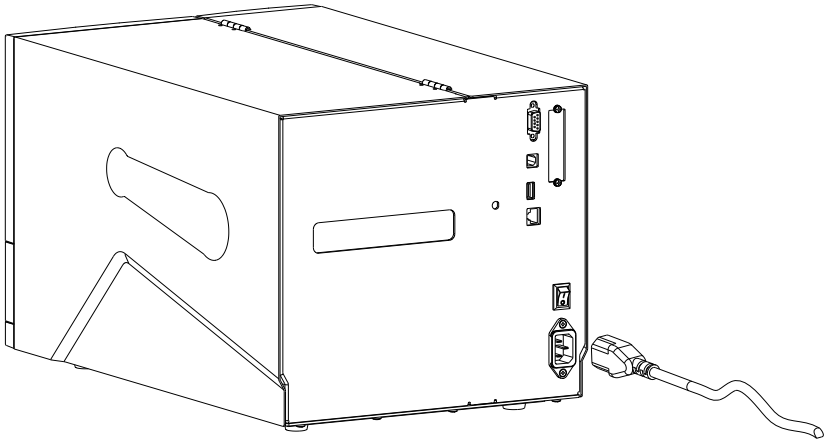

Figure 2-5 Connect the Power Cord

3. Plug the power cord into a live wall outlet. See Figure 2-6.

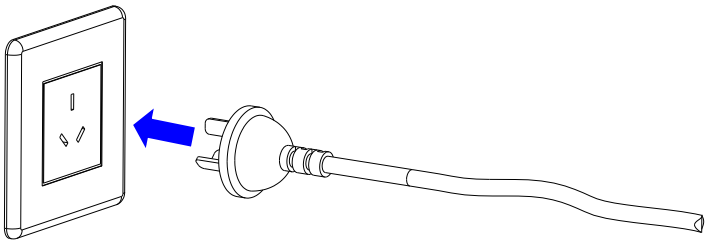

Figure 2-6 Plug the power cord

NOTE

The shape of power plug varies depending on the region in which it was purchased.

2.2.3 Loading the Ribbon

CAUTION

- *Load ribbon only when using the thermal transfer printing mode. Remove any ribbon that may be loaded when using the direct thermal printing mode.*
- *Use ribbon that is wider than the media to protect the printhead form wear.*

To load the ribbon, refer to Figure 2-7 through Figure 2-12 and follow the steps below:

1. Lift to open the right cover of the printer.
2. Turn the Lever counter clockwise to open the Printhead. See Figure 2-7.

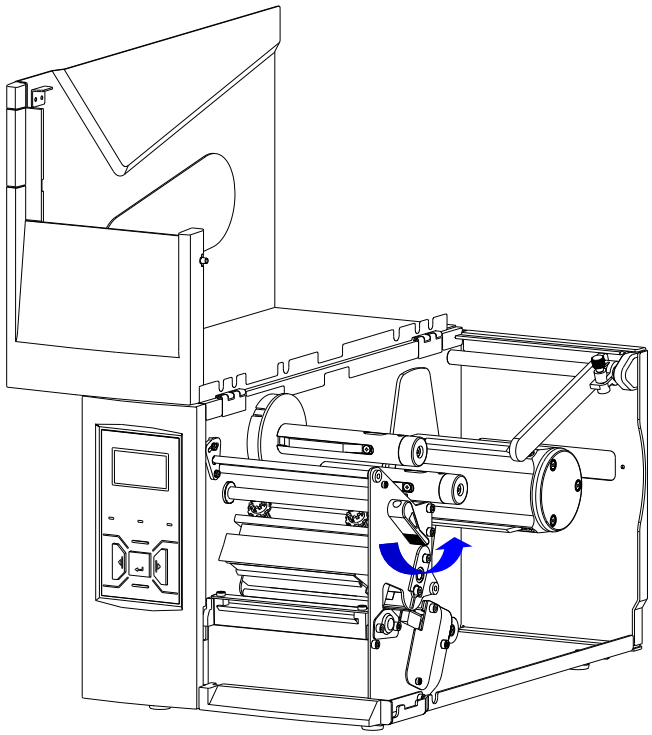

Figure 2-7 Open the Printhead

3. Stick a label to the outside/ inside of the ribbon to check which side the ink is on. See Figure 2-8.

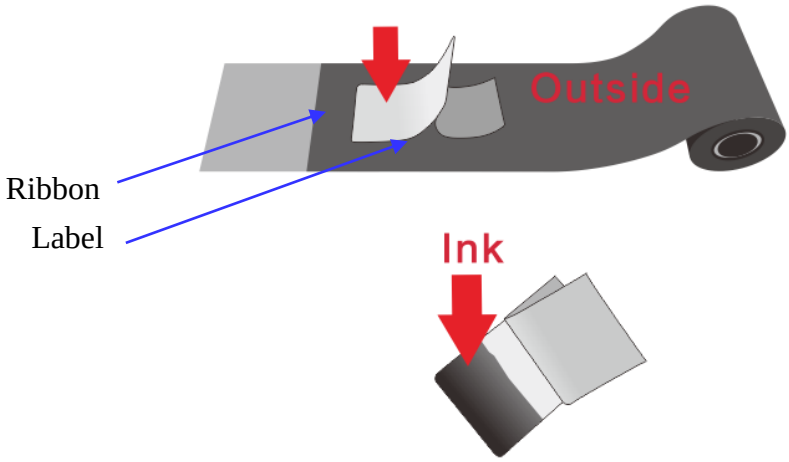

Figure 2-8 Check Ink Side

4. Place the ribbon roll on the Ribbon Supply Spindle, see Figure 2-9. Make sure that the ribbon roll is firmly pushed against the Stop Plate.

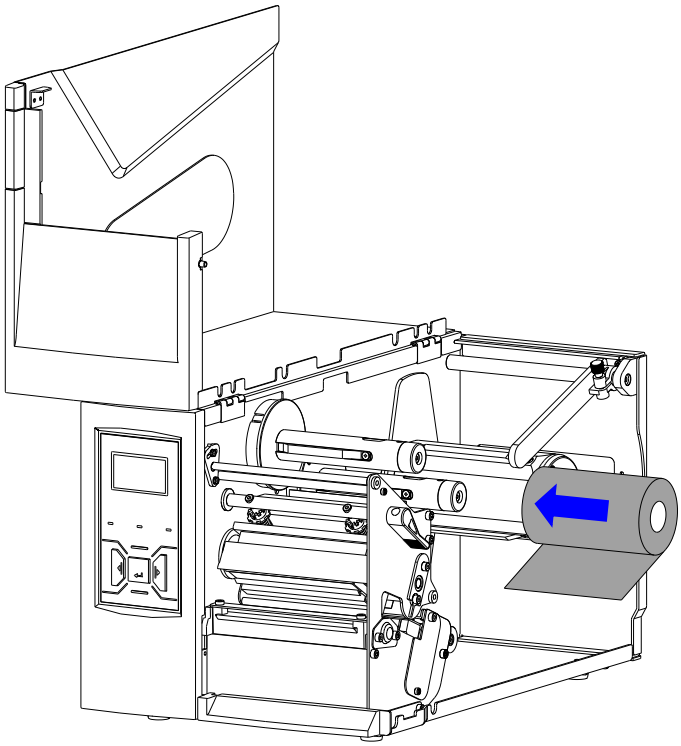

Figure 2-9 Load Ribbon Roll

5. Follow the ribbon path indicated in Figure 2-4, thread the ribbon under the Ribbon Guide Rod and pass the Printhead Assembly, make sure that the ribbon's ink side is facing the media. See Figure 2-10.

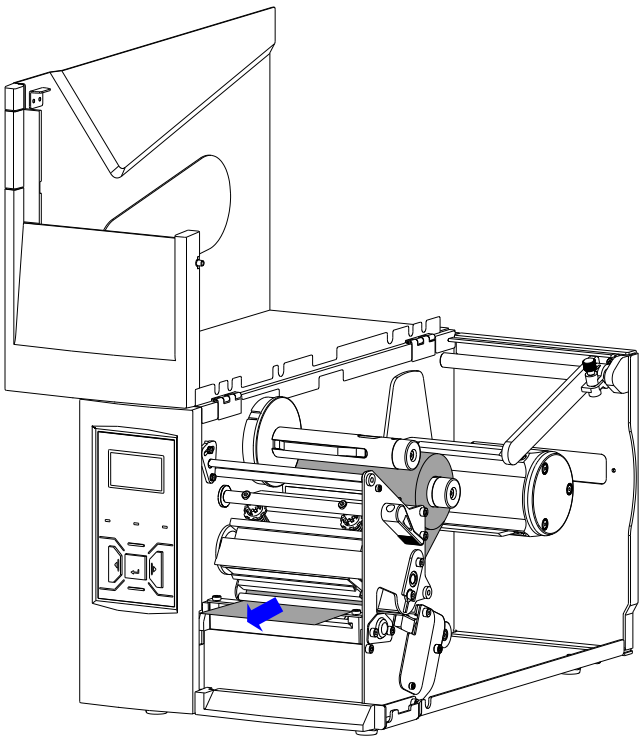

Figure 2-10 Thread Ribbon Through Printhead Assembly

6. Wrap the ribbon around a spare ribbon core to form a Ribbon Take-up Roll. See Figure 2-11.

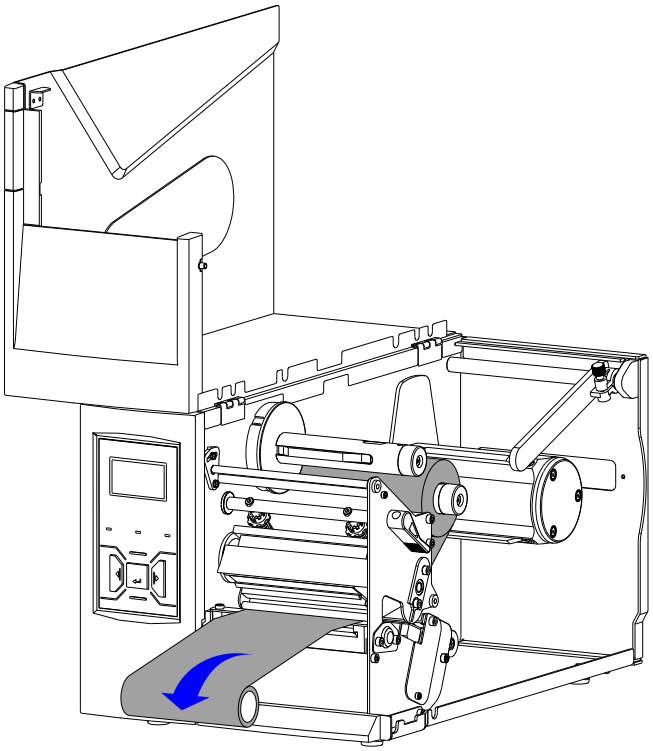

Figure 2-11 Ribbon Take-up Roll

7. Slide the Ribbon Take-up Roll on the Ribbon Take-up Spindle and push it firmly against the Stop Plate. Turn the Take-up Spindle until the ribbon is tightly wound. See Figure 2-12.

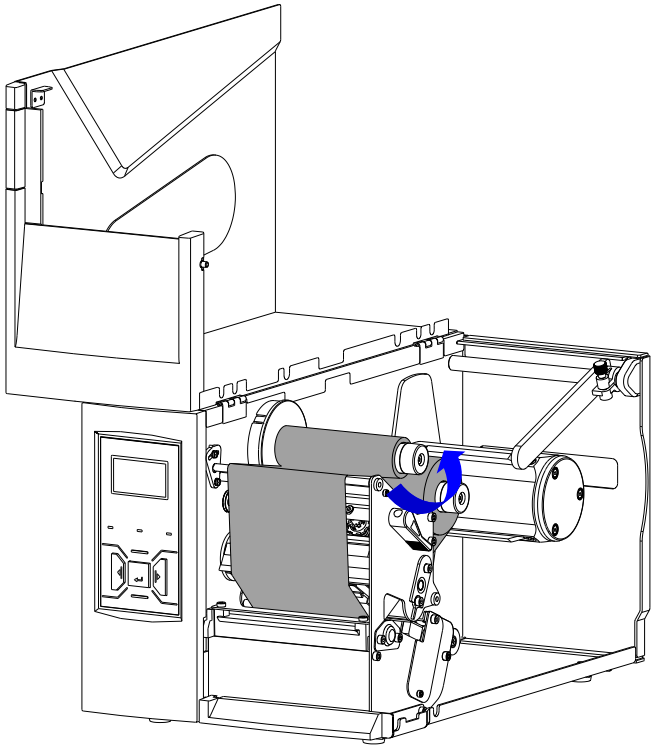

Figure 2-12 Ribbon Loaded

NOTE

To make sure the Ribbon End Sensor works properly, please use ribbon rolls that end with reflective materials or transparent materials with good reflective performance.

2.2.4 Loading the Media

The printers can be operated under three different modes: Standard Mode, Tear-off Mode, and Cutter Mode.

- In Standard Mode, the printer stops and goes into standby as soon as the print job is complete.
- In Tear-off Mode, after the print job is finished, the printer will feed the label until the edge of it aligns with the edge of the Tear-off Bar allowing easy tear off for the user.
- In Cutter Mode, the printer stops and cuts the printed label(s) (Only available on models with cutter installed).

2.2.4.1 Switching Media Core Adapters

CAUTION

The printer is equipped with both 1.5″ and 3″ media core adapters. The 1.5″ core adapter is located inside the 3″ core adapter. To load a 1.5″ core media roll, please first remove the 3″ core adapter; and then adjust the position of the Media Roll Guide Stopper.

Steps to switch to the 1.5″ core adapter:

1. Remove the 3″ core adapter. Refer to Figure 2-13. Use the Allen wrench bundled with the printer to remove the screw securing the 3″ core adapter, and then slide the 3″ core adapter out to remove it from the printer.

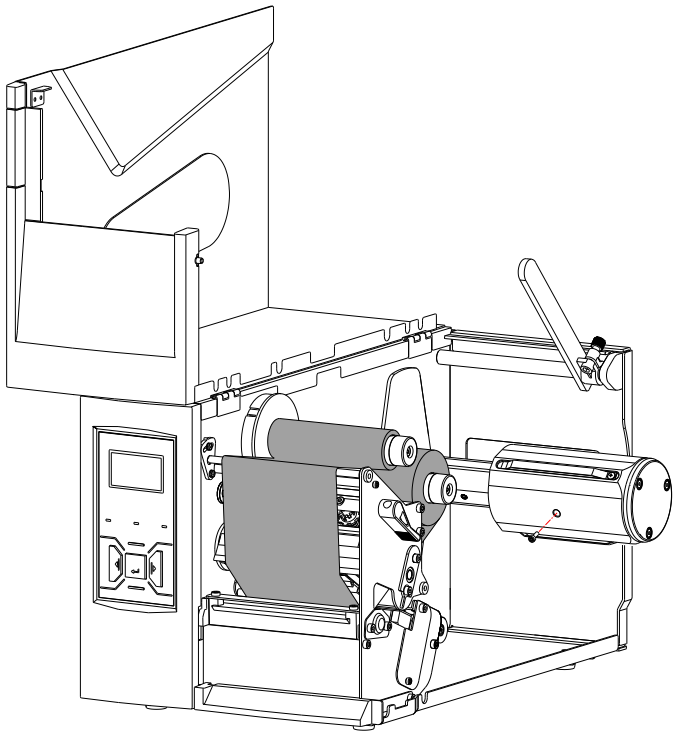

Figure 2-13 Removing the 3″ core adapter

2. Adjust the position of the Media Roll Guide Stopper. Refer to Figure 2-14. Loosen (do not remove) the two screws securing the Media Roll Guide Stopper, and then move the Media Roll Guide Stopper upwards until it's stopped, and then fasten the two screws. This will give the media roll guide more room to rotate so as to be able to reach (no touch) the thinner 1.5″ core adapter.

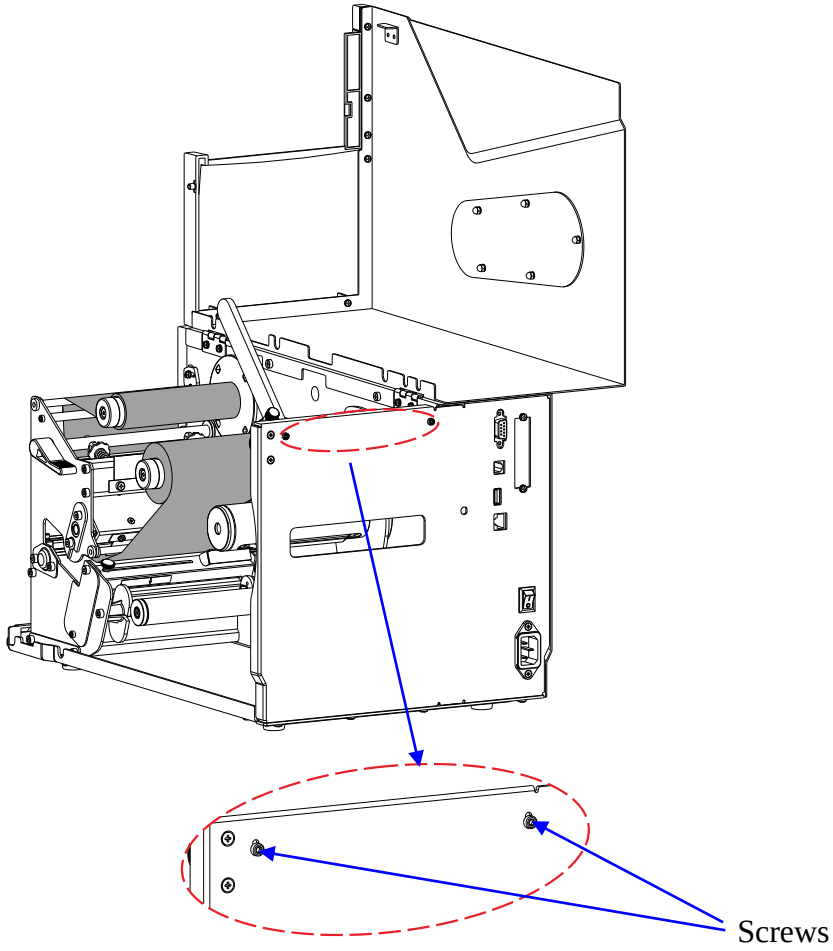

Figure 2-14 Adjusting the position of the Media Roll Guide Stopper

NOTE

When switching back to 3" core adapter, make sure to reverse the Media Roll Guide Stopper position adjustment process and move the Media Roll Guide Stopper back to its lower position.

2.2.4.2 Tear-off Mode

CAUTION

- *Tear-off Mode is the default operation mode, switching Tear-off Mode off will automatically enable Standard Mode.*
- *The steps of loading the media in Standard Mode are the same as in Tear-off Mode.*

To load media into the printer while under Tear-off Mode, follow the steps below:

1. Lift to open the right cover.
2. Loosen the Thumbscrew, then lift the Baffle Arm, as shown in Figure 2-15.

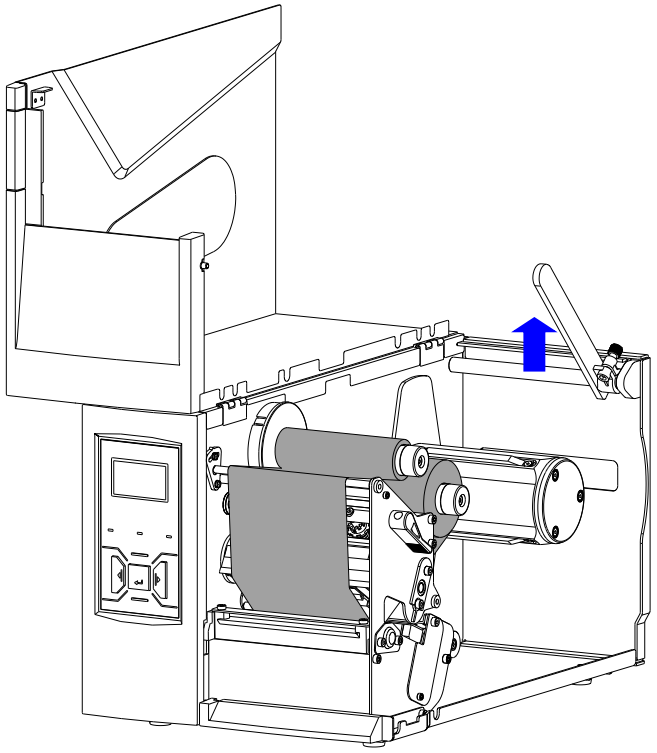

Figure 2-15 Lift the Baffle Arm

3. Load a media roll onto the Media Spindle, make sure that the media roll is firmly pushed against the Stop Plate. As shown in Figure 2-16.

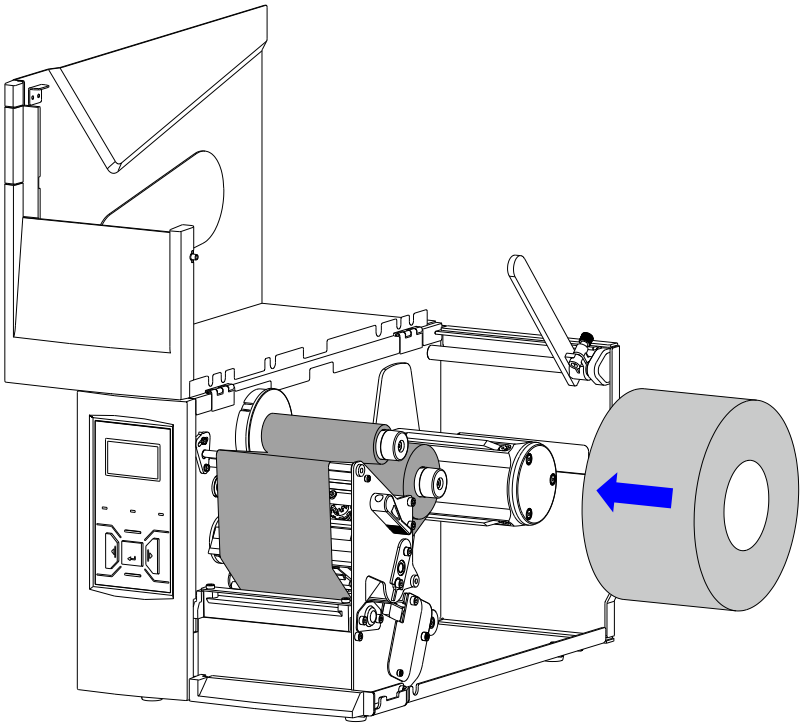

Figure 2-16 Roll Media Loading

4. Thread the media along the Media Path as shown in Figure 2-4, loaded media is shown in Figure 2-17.

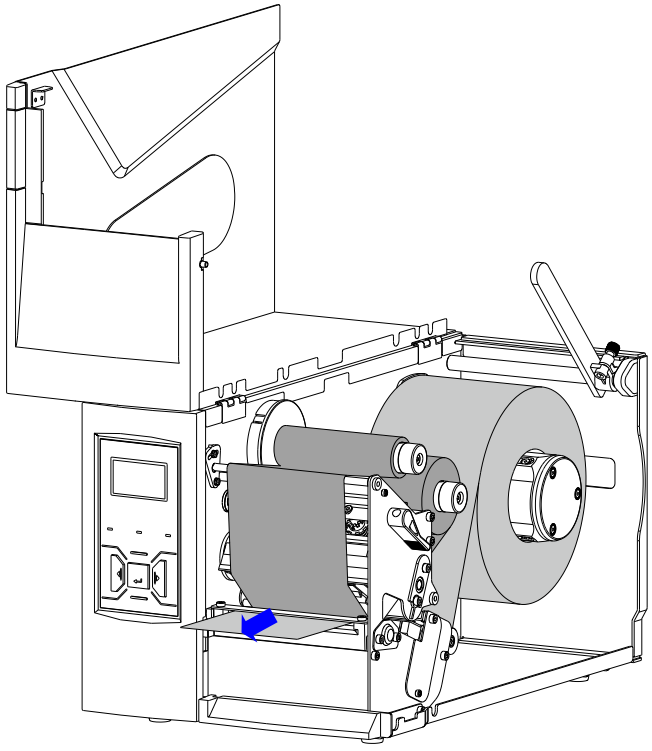

Figure 2-17 Media Loaded

5. Move the Media Guide Slide to touch the edge of the media, making sure not to pinch or squeeze the media; keep the media flat and smooth. As shown in Figure 2-18.

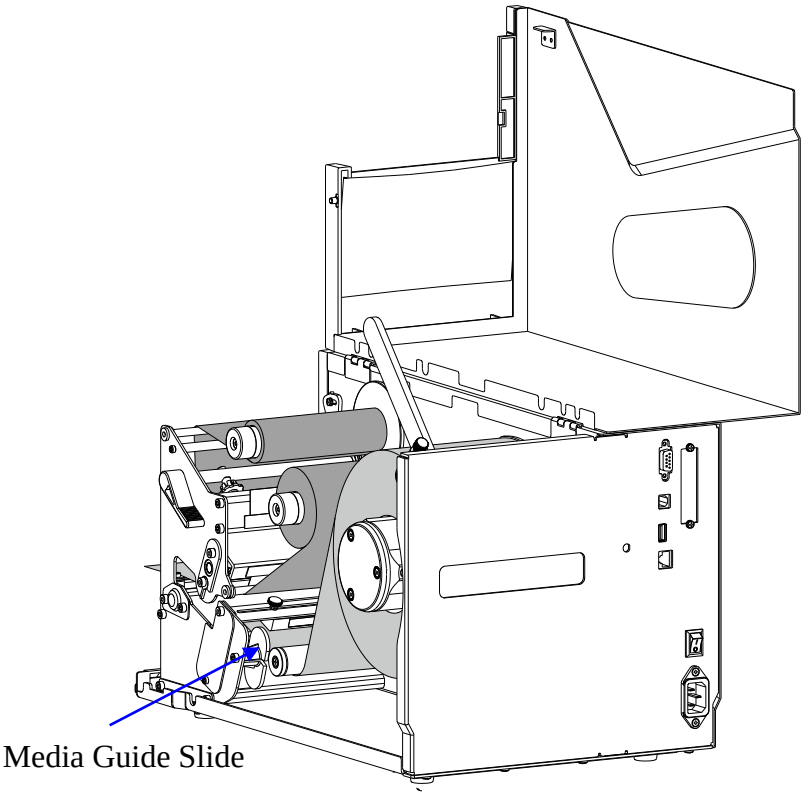

Figure 2-18 Move the Media Guide Slide

6. Adjust the Baffle Arm by pushing it slightly against the outside edge of the media roll. Tighten the Thumbscrew to lock the Baffle Arm in place. As shown in Figure 2-19.

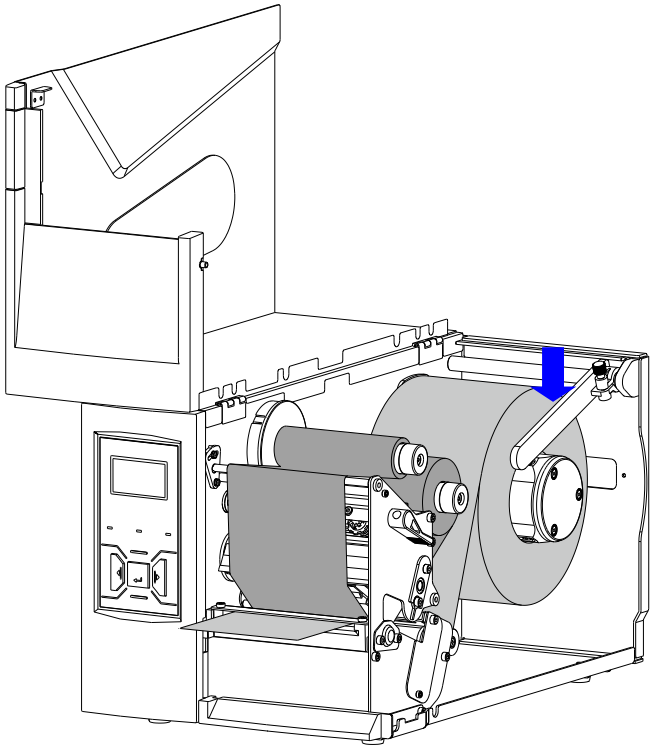

Figure 2-19 Adjust and lock the Baffle Arm

7. Turn the Lever clockwise to lock the Printhead in place. As shown in Figure 2-22.

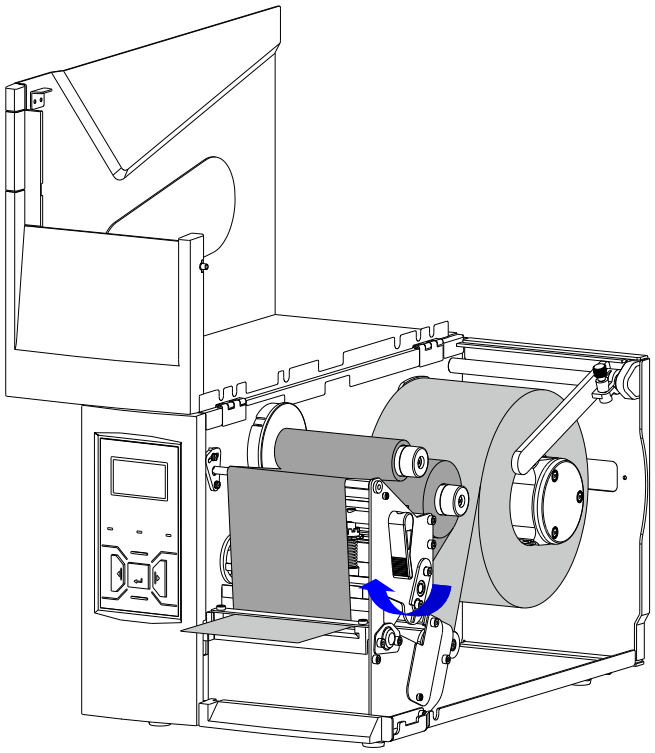

Figure 2-20 Lock the Printhead

8. Calibrate the media sensor. See 3.3.1 Adjusting the Media Sensor

2.2.4.3 Cutter Mode (Cutter accessory required)

To load media into the printer while under Tear-off Mode, follow the steps below:

1. Set the printer to Cutter Mode, see 3.2.2 Main menu.
2. Reset the cutter before use.
   To reset, press and hold the [CANCEL] button until three indicators start blinking (This process takes around 4 seconds), release the button and press it again to finish the reset.

   NOTE

   Please reset the cutter before installing the media to prevent any issues with installation.
3. Load the media, please refer to 2.2.4.2 Tear-off Mode. Thread the media through the opening on the cutter as shown in Figure 2-21.

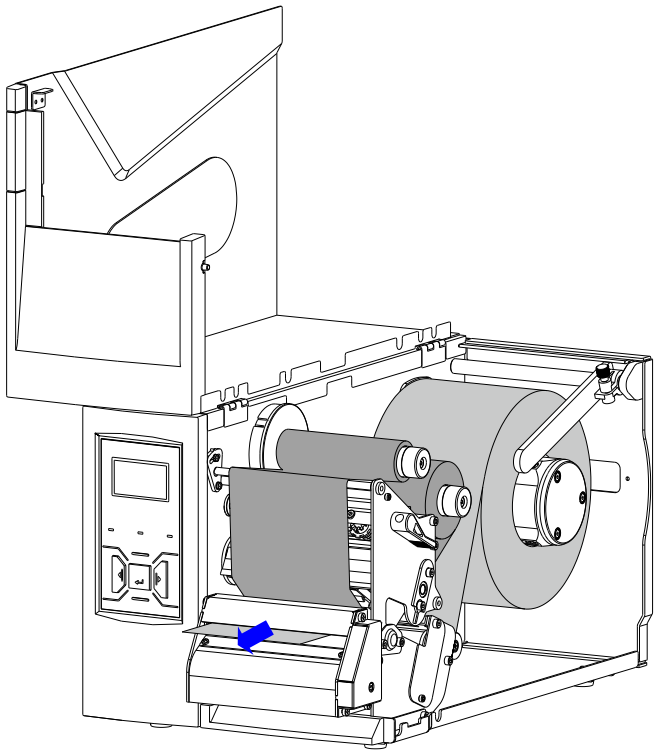

Figure 2-21 Cutter Mode

4. Turn the Lever clockwise to lock the Printhead in place, as shown in Figure 2-22.

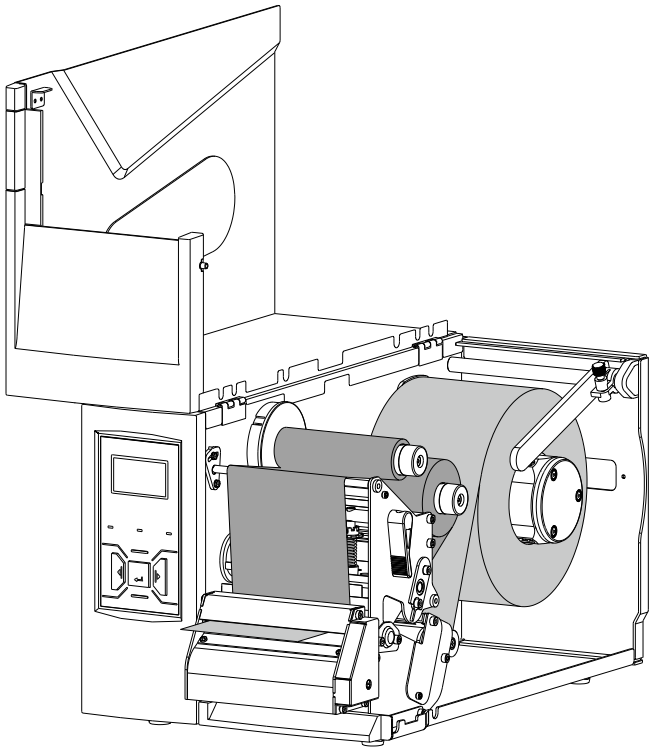

Figure 2-22 Lock the Printhead

5. Calibrate the media sensor. See 3.3.1 Adjusting the Media Sensor.

2.3 Installing the Printer Driver

2.3.1 USB Port Installation

CAUTION

If you have installed the POSTEK printer driver on the computer before, when an additional printer is connected to the computer and powered on, the printer driver for the additional printer will be installed automatically.

When installing the POSTEK printer driver for the first time, if you connect the printer to your computer via the USB port, please refer to the steps below to complete the printer driver installation (Windows10 operating system for example).

1. Connect the printer to your computer using a USB cord, then power on the printer.
2. Visit the POSTEK website: http://www.postekchina.com and download the printer driver.
3. Double-click the printer driver icon to bring up the "License Agreement" screen. Select "I accept the Items in the license agreement", then click "Next", as shown in Figure 2-23.



Figure 2-23 License Agreement Screen

4. The "Installation Directory" screen displays. Click "Browse…" and select where the files will be installed, then click "Next", as shown in Figure 2-24.

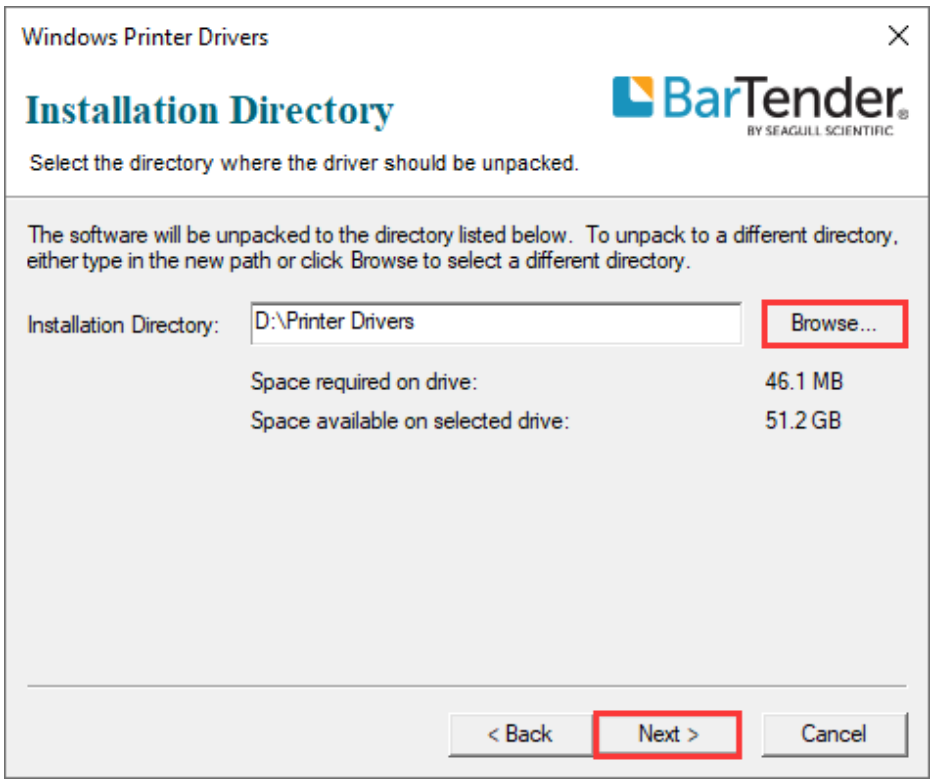

Figure 2-24 Installation Directory Screen

5. On the "Installation Information" screen, check the box that says "Run Driver Wizard after unpacking drivers", then click "Finish", as shown in Figure 2-25.

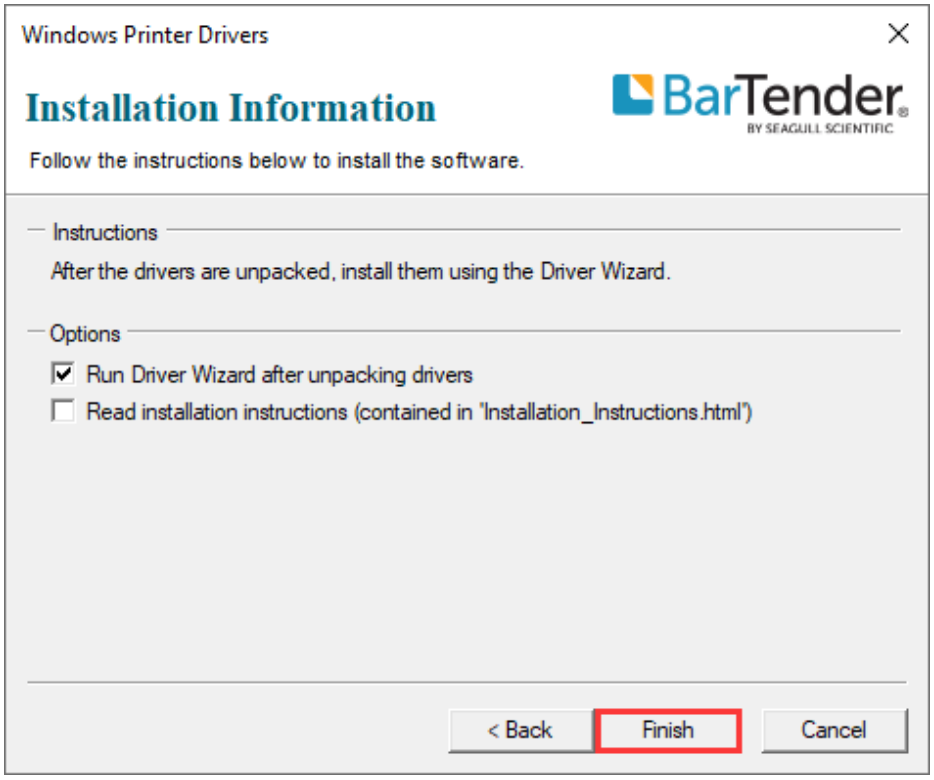

Figure 2-25 Installation Information Screen

6. On the "Seagull Driver Wizard" screen, select "Install printer drivers", and then click "Next", as shown in Figure 2-26.



Figure 2-26 Seagull Driver Wizard Screen

7. The connected printer will be detected (POSTEK I200 for example), click "Next", as shown in Figure 2-27.

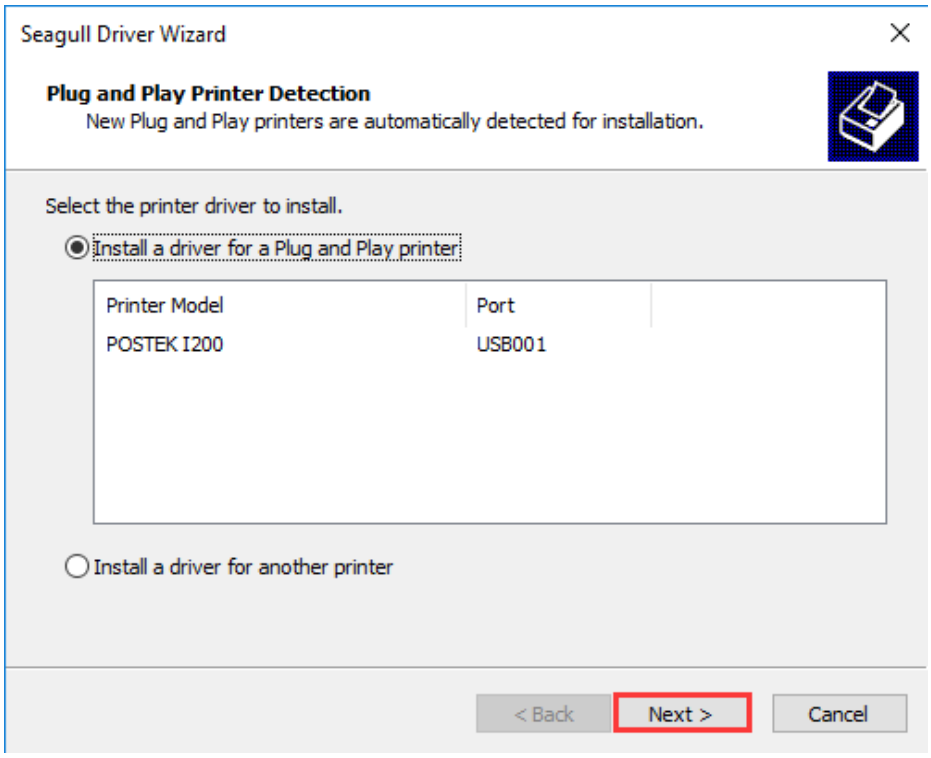

Figure 2-27 Printer Detected

8. On the "Specify Printer Name" screen, enter a name for the printer, as shown in Figure 2-28, then click "Next" to complete the driver installation.

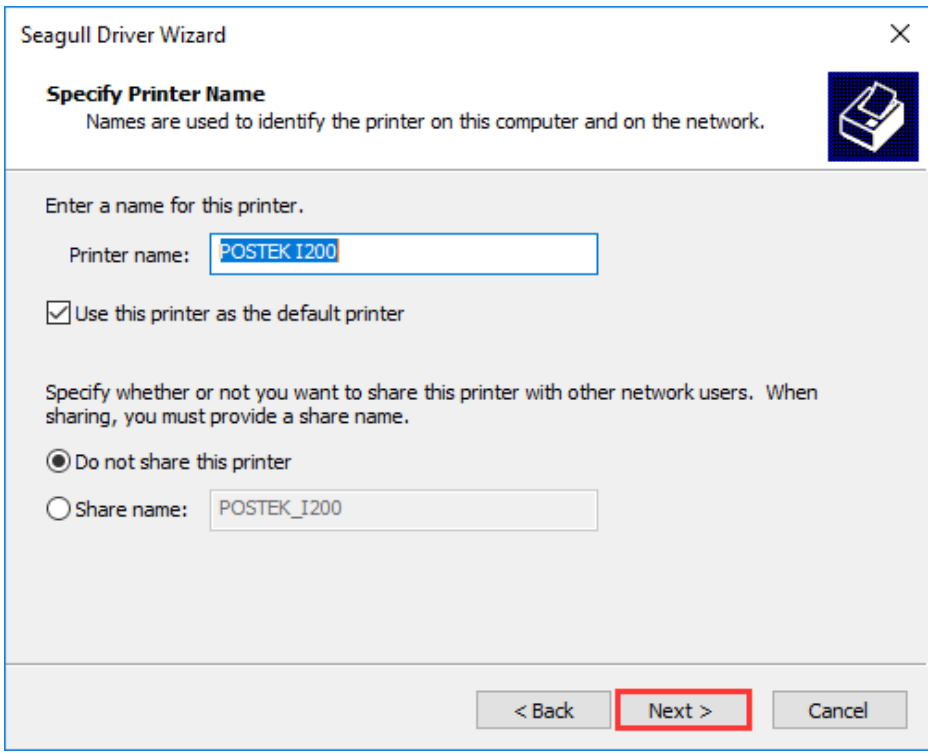

Figure 2-28 Specify Printer Name

9. Print a test page to see whether the printer is connected properly, as shown in Figure 2-29.

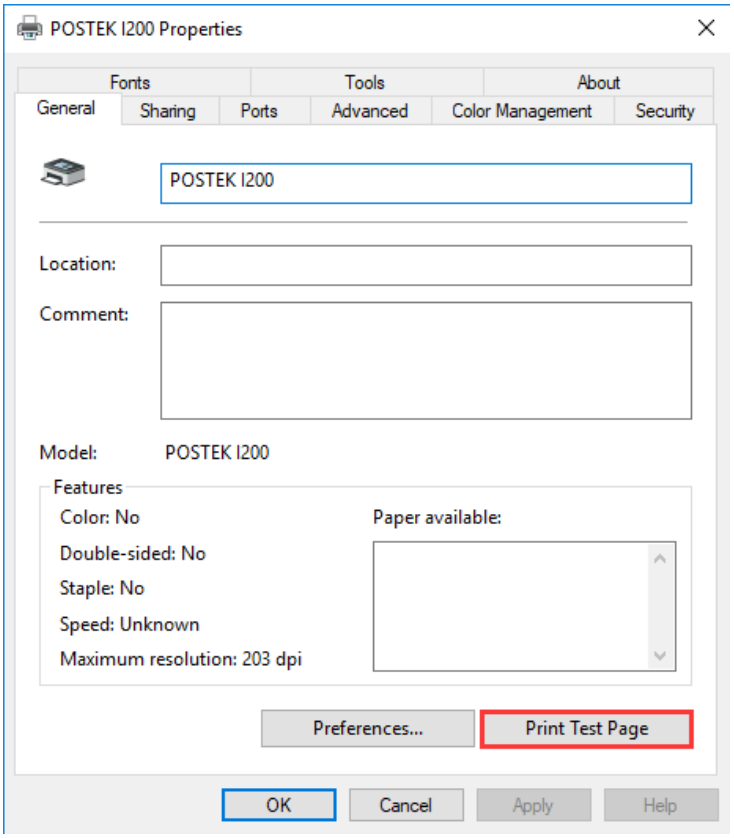

Figure 2-29 Print Test Page

2.3.2 Network Port Installation

If you connect the printer to your computer using an Ethernet cable or through WLAN, you will need to configure the printer's network parameters first, and then install the printer driver and configure the printer port information.

2.3.2.1 Ethernet Configuration

You can configure the printer's network parameters through Utility software. The steps are as follows:

1. Connect the printer to your computer using an Ethernet cable, then power on the printer.
2. Check the LAN information. See Figure 2-30.

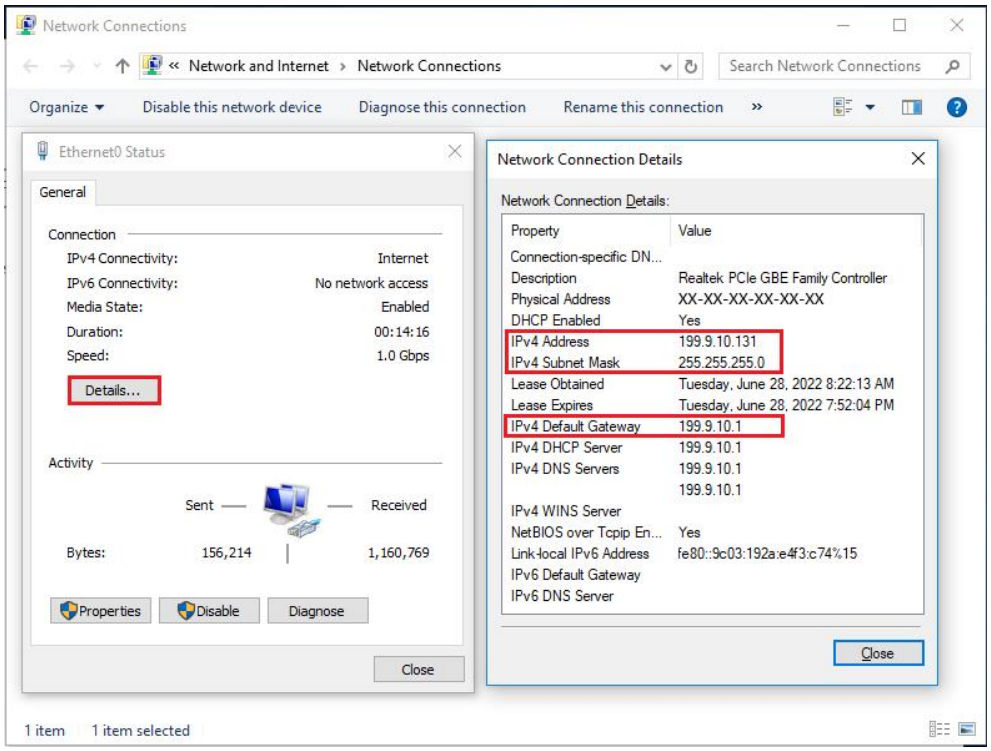

Figure 2-30 Check the LAN information

3. Visit the POSTEK website: http://www.postekchina.com and download the Utility software.
4. Open the Utility software and click "Network", as shown in Figure 2-31.

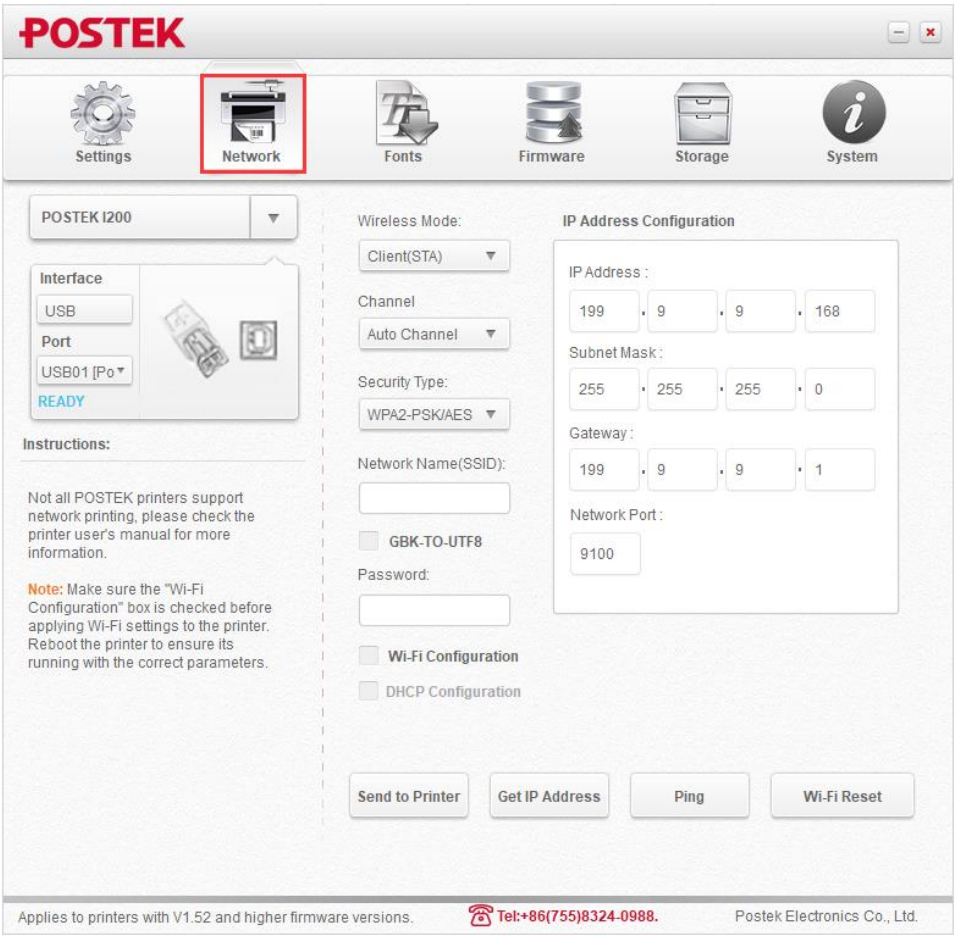

Figure 2-31 Open the Utility

5. Enter the "IP Address", "Subnet Mask", and "Gateway" (Note: the IP address here must be in the same network segment as the LAN, and the last figure of the IP address should be unique in the network group), as shown in Figure 2-32.

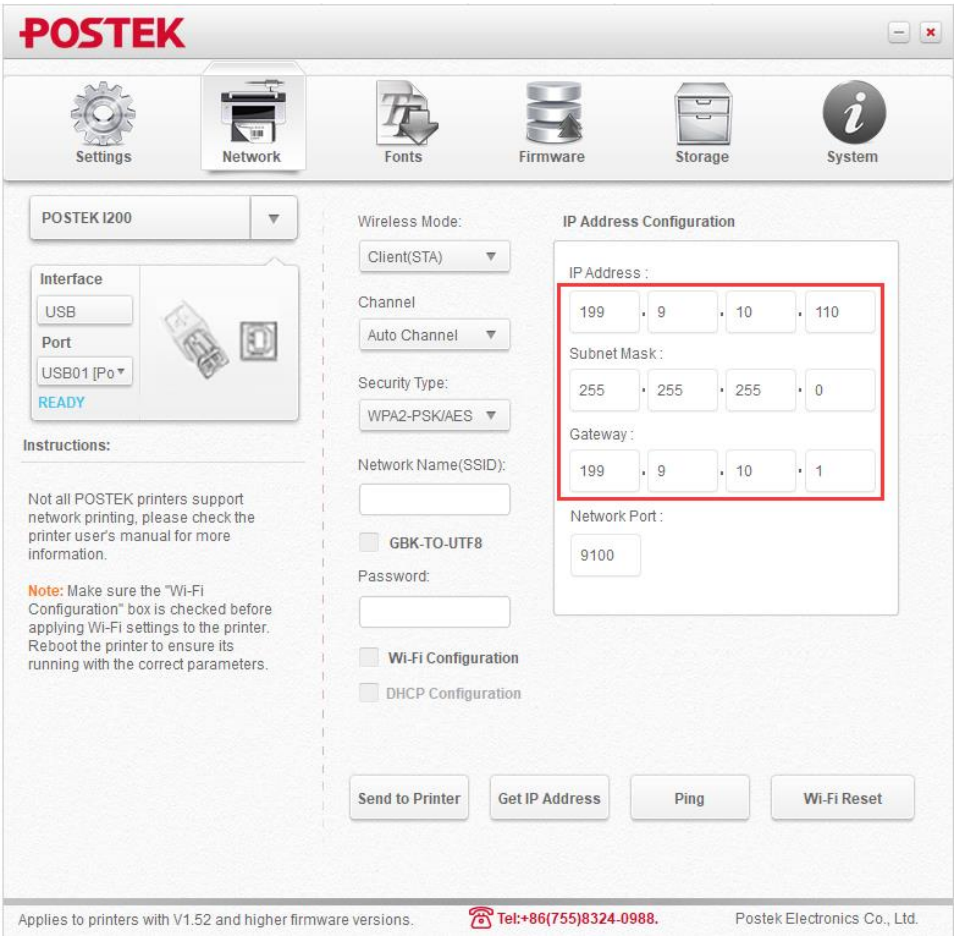

Figure 2-32 Configure the Network Parameters

6. Click "Send to Printer", the [MEDIA] and [RIBBON] indicators will blink simultaneously, when the two indicators are lit and return to a steady state, click "Ping" to check whether the configuration is successful or not, as shown in Figure 2-33.

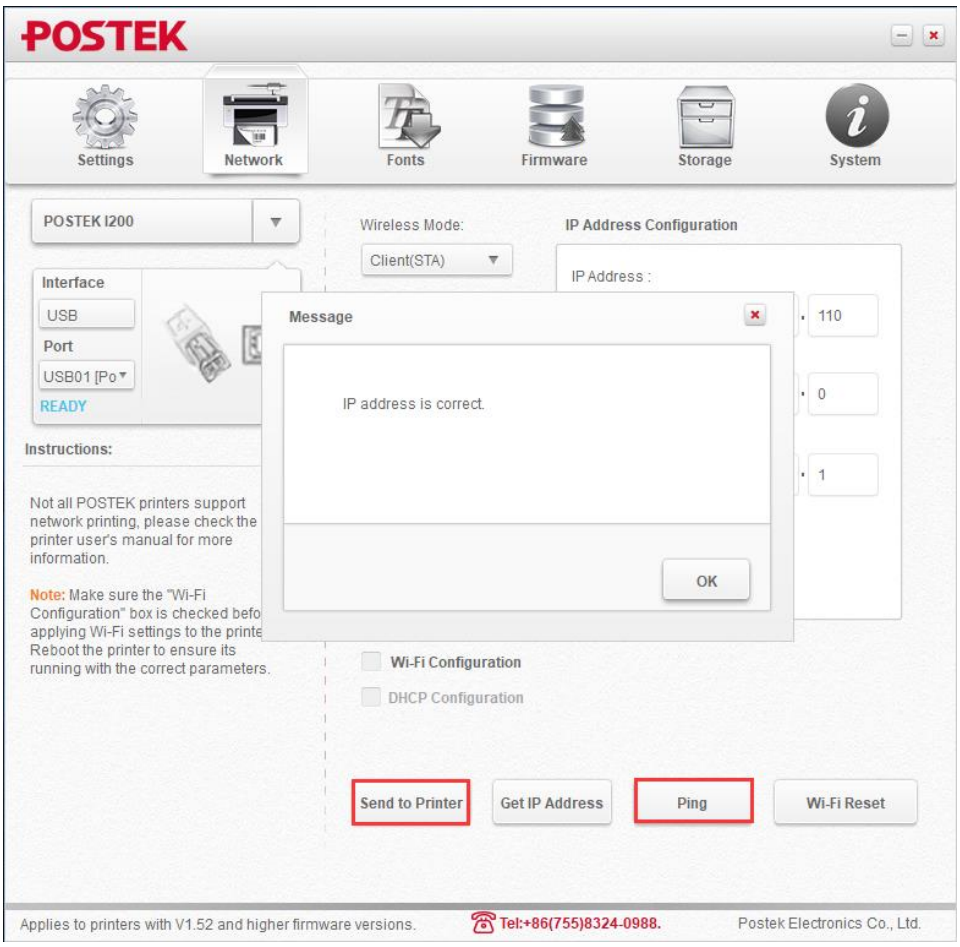

Figure 2-33 Successful Configuration

2.3.2.2 Wireless Network Configuration

You can configure the printer's wireless network parameters through Utility software. The steps are as follows:

1. Connect the printer to your computer using a USB cord, then power on the printer.
2. Visit the POSTEK website: http://www.postekchina.com and download the Utility software.
3. Open the Utility software and click "Network", as shown in Figure 2-34.

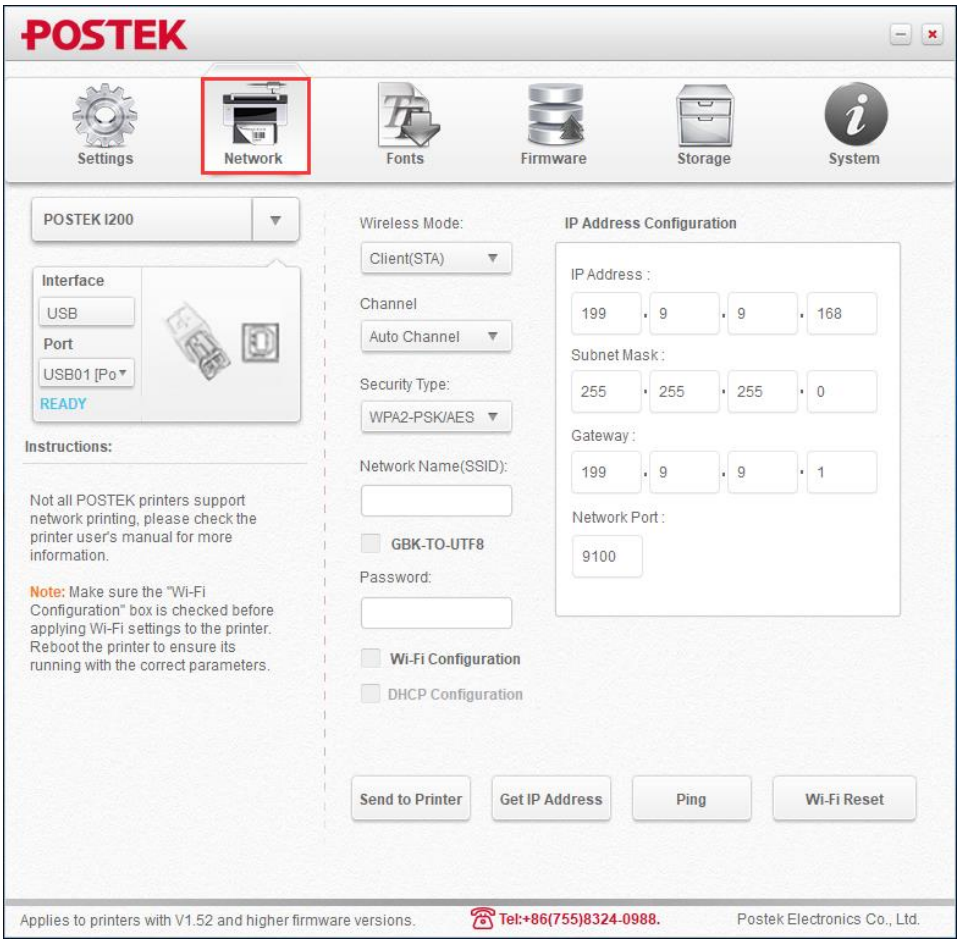

Figure 2-34 Open the Utility

4. Enter the wireless mode, channel, security type, network name (SSID), password and IP address, then click "Wi-Fi Configuration", as shown in Figure 2-35.

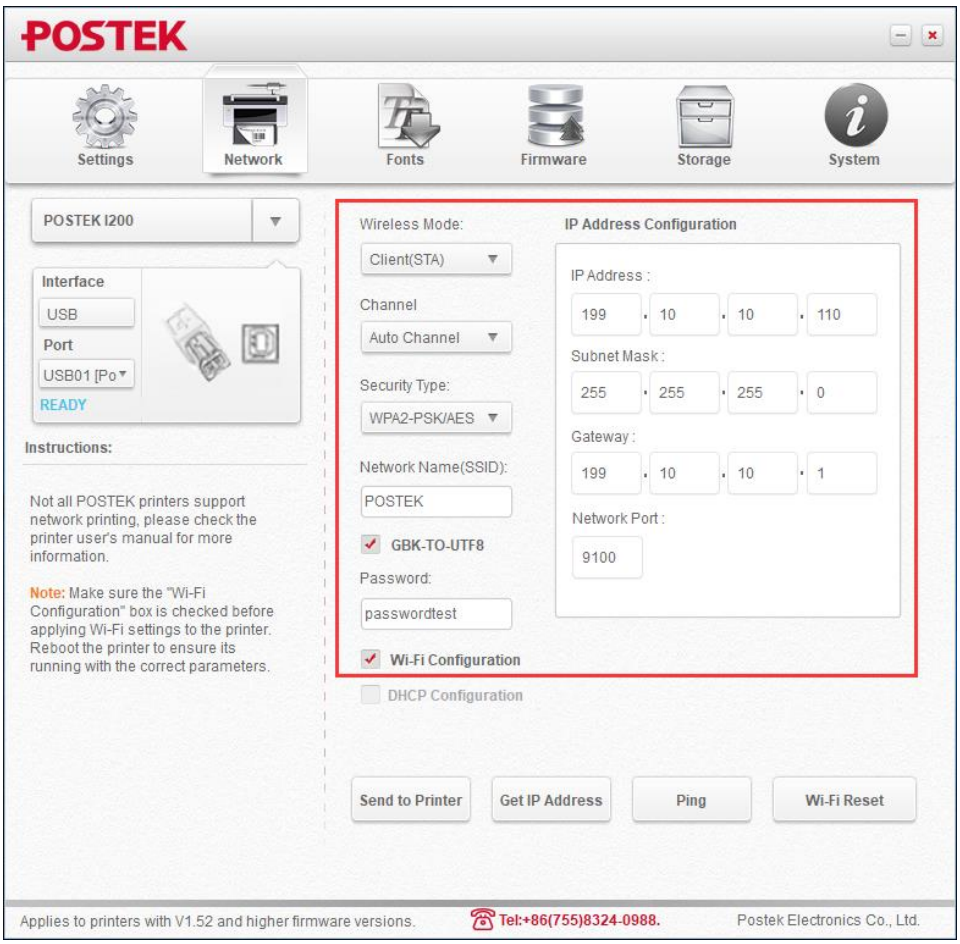

Figure 2-35 Wireless Network Configuration

Table 2-5 Items Description

Items	Description
Wireless Mode	Set the wireless mode. The default value is Server (AP). • Client (STA): The STA mode enable printer to connect to the WLAN created by wireless router via wireless access, which is regarded as a device within the WLAN group and can be accessed by other devices that connected to this WLAN. • Server (AP): The AP mode creates a wireless network that provides wireless access for other mobile devices with Wi-Fi function (such as laptop, taplet PC and smartphone) to connect to the printer directly.
Channel	Not necessary to change.
Security Type	Set the security type. • Client (STA): Needs to be set according to actual WLAN. • Server (AP): Not necessary to change.
Network Name (SSID)	Set the network name. • Client (STA): Needs to be set according to actual WLAN. • Server (AP): Not necessary to change.
GBK-TO-UTF8	Not necessary to change.
Password	Set the password. • Client (STA): Password for WLAN. • Server (AP): Password for other mobile devices to connect to the printer.

Items	Description
IP Address Configuration	Set the IP Address of the printer. • Client (STA): Set it on the same network segment as the WLAN. The last figure of the IP address should be unique in the network group. • Server (AP): Not necessary to change.
Wi-Fi Configuration	Check it before "Send to Printer".
DHCP Configuration	It is available when the box of "Wi-Fi Configuration" is checked. The IP address, subnet mask and gateway are not available for configuration once DHCP is enabled.

5. Click "Send to Printer", the printer will restart after a few seconds. You can check whether the configuration is successful or not through printing the configuration information.

   NOTE

   If WiFi configuration is not successful, please check and confirm that the network name, password, subnet mask and gateway are correct, and that the IP address is not occupied.

2.3.2.3 Driver Installation and Port Configuration

After configuring the printer's network parameters, please refer to the following steps to complete the driver installation and port configuration.

1. Visit the POSTEK website: http://www.postekchina.com and download the printer driver.
2. Double-click the printer driver icon, follow the prompted screen to extract the driver installer and run the driver installation wizard (for details, please refer to Steps 3~6 in 2.3.1 USB Port Installation).
3. On the "Connect Printer" screen, select "Network (Ethernet or WiFi)", and then click "Next", as shown in Figure 2-36.

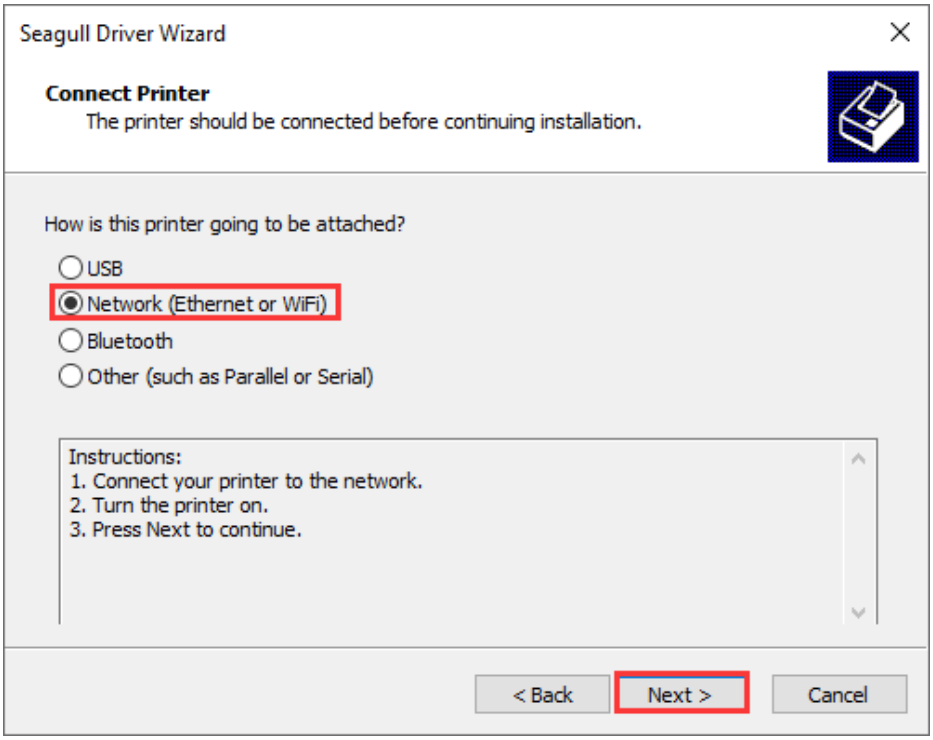

Figure 2-36 Connect Printer Screen

4. The "Specify Printer Model" screen displays, select the printer model (POSTEK I200 for

example), and click "Next", as shown in Figure 2-37.

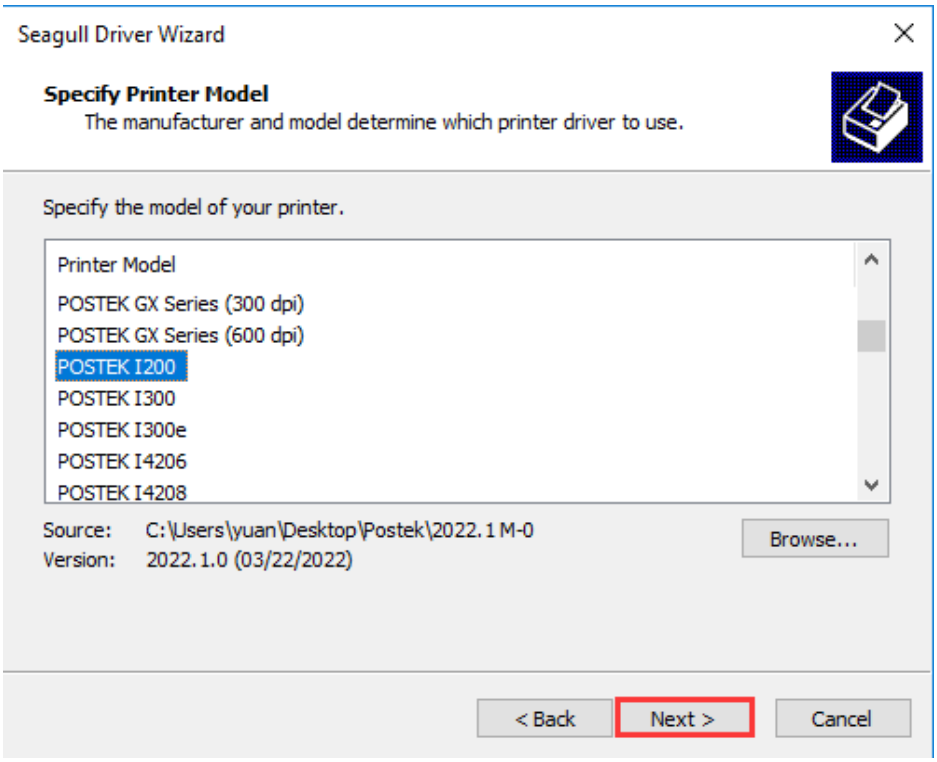

Figure 2-37 Specify Printer Model Screen

5. On the "Specify Port" screen, click "Create Port…" to bring up "Create Port" dialog box, select "Standard TCP/IP Port" - "New Port…", as shown in Figure 2-38.

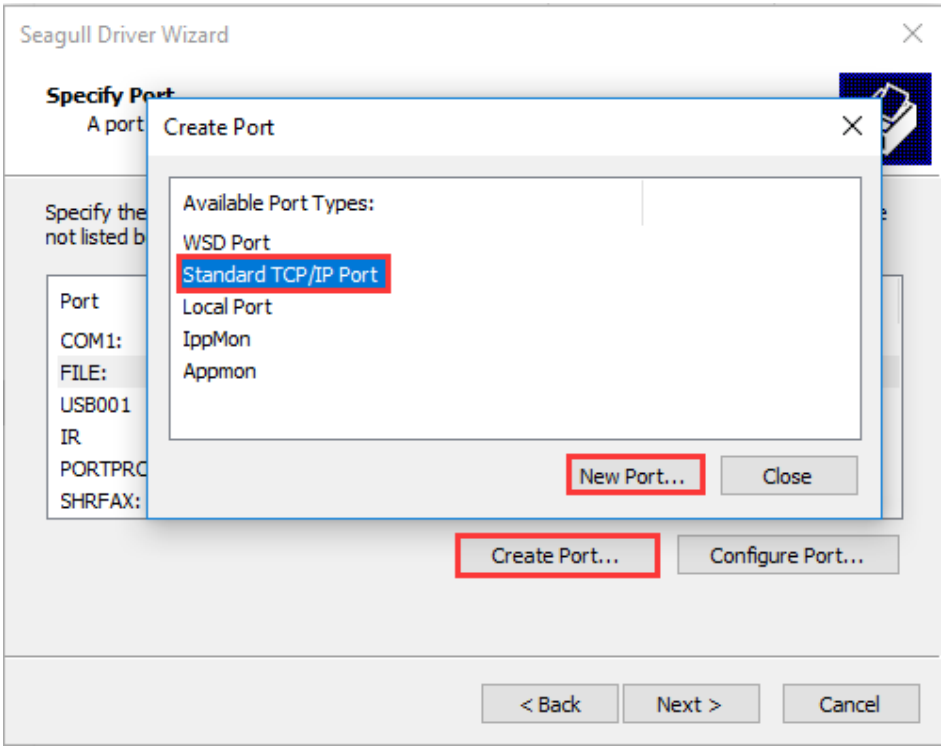

Figure 2-38 Create Port

6. The "Add Standard TCP/IP Printer Port Wizard" screen displays, click "Next", as shown in Figure 2-39.

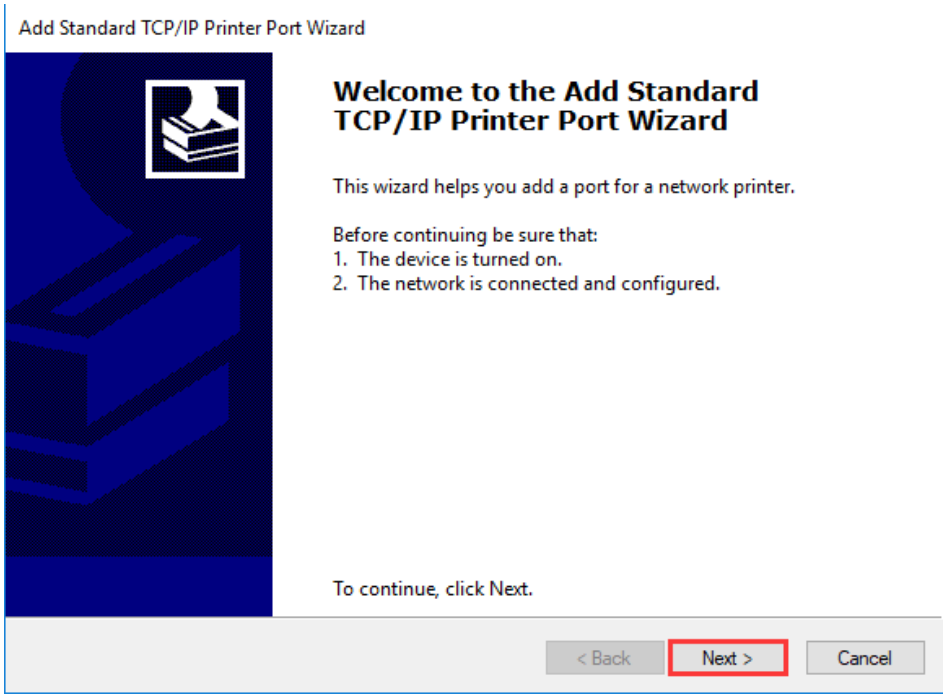

Figure 2-39 Add Standard TCP/IP Printer Port Wizard

7. On the "Add Port" screen, enter the IP Address of the printer (Note: the IP address here must be consistent with the IP address of the printer that has been set, and the port name will be generated automatically), and then click "Next", as shown in Figure 2-40.

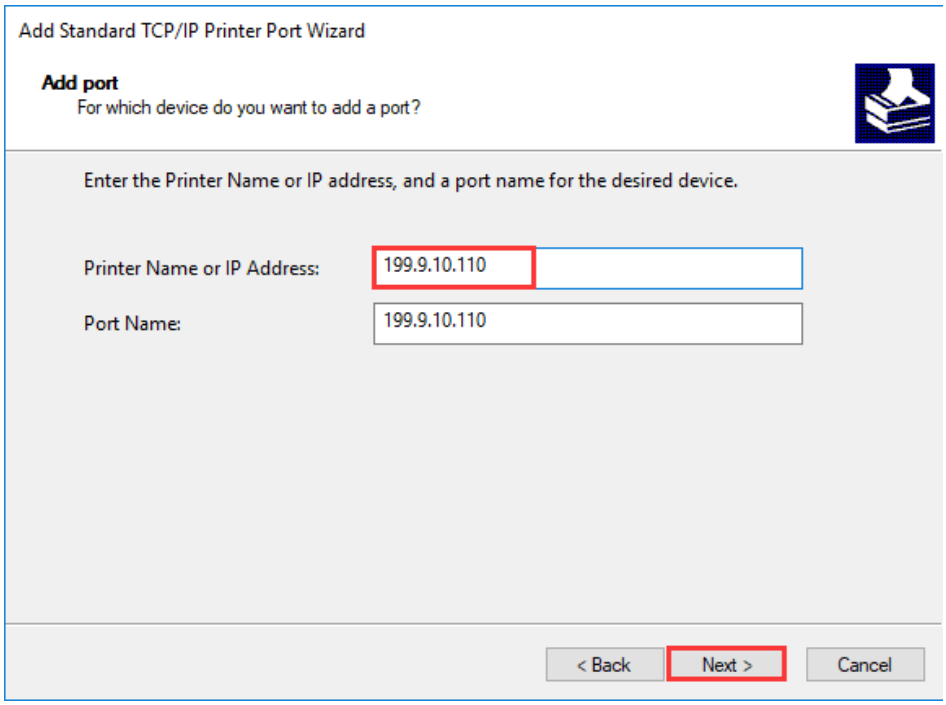

Figure 2-40 Add Port Screen

8. Windows will automatically detect the TCP/IP port. Click "Finish" to complete adding Standard TCP/IP Printer Port, as shown in Figure 2-41.

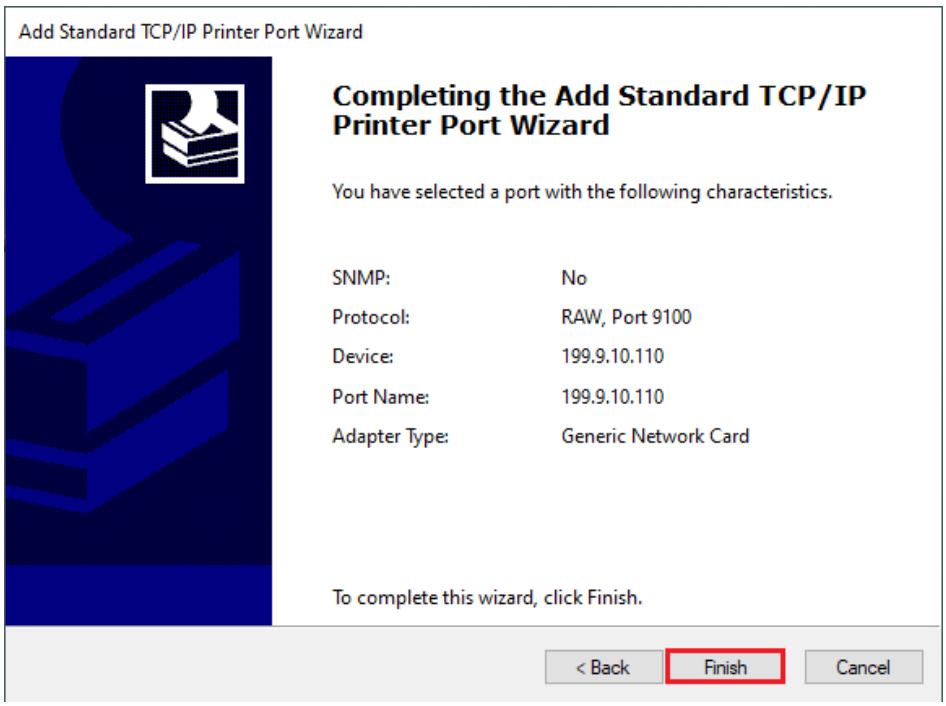

Figure 2-41 Complete adding Standard TCP/IP Printer Port

9. Return to the "Specify Port" screen, select the TCP/IP Port that has been added, and click "Next", as shown in Figure 2-42.

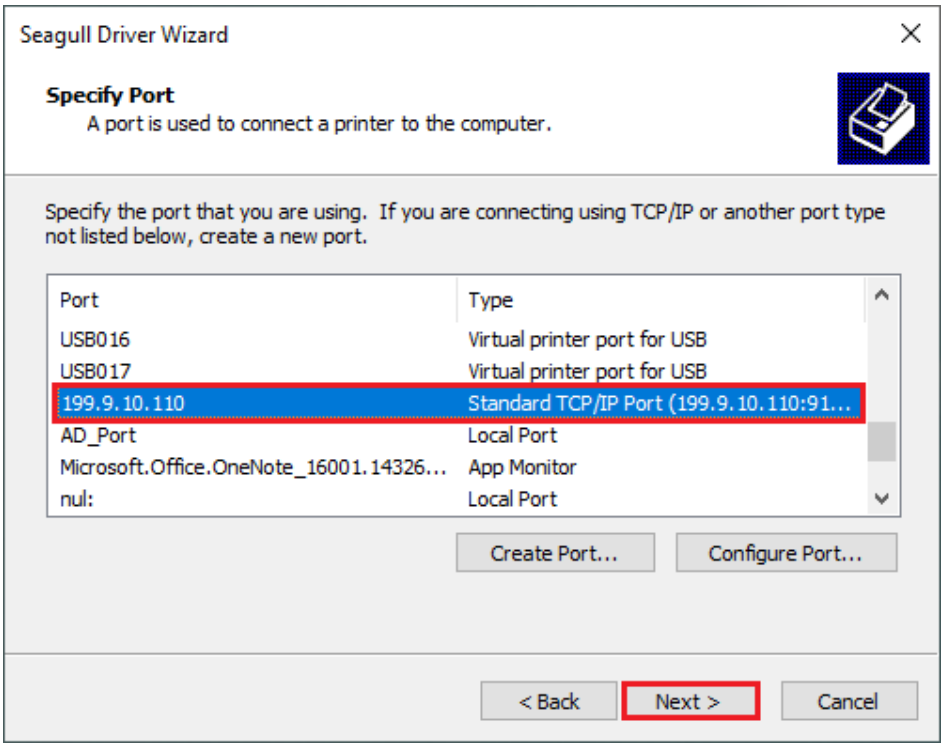

Figure 2-42 Specify Port Screen

10. On the "Specify Printer Name" screen, enter a name for the printer, as shown in Figure 2-43, click "Next" to complete the driver installation.

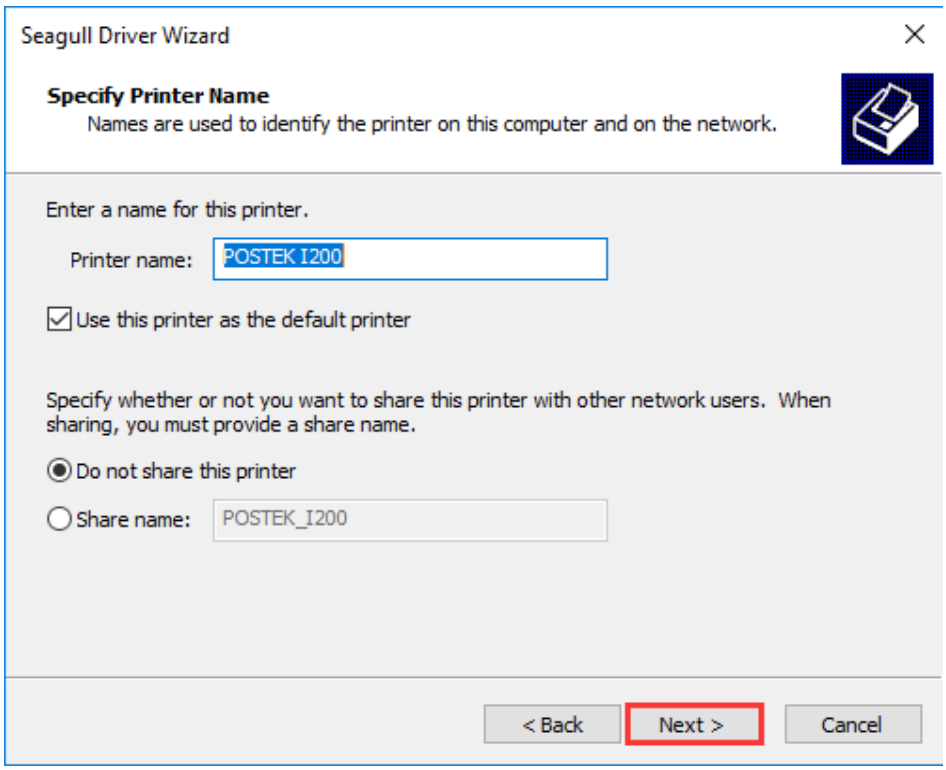

Figure 2-43 Specify Printer Name

11. Print a test page to see whether the printer is connected properly. As shown in Figure 2-44.

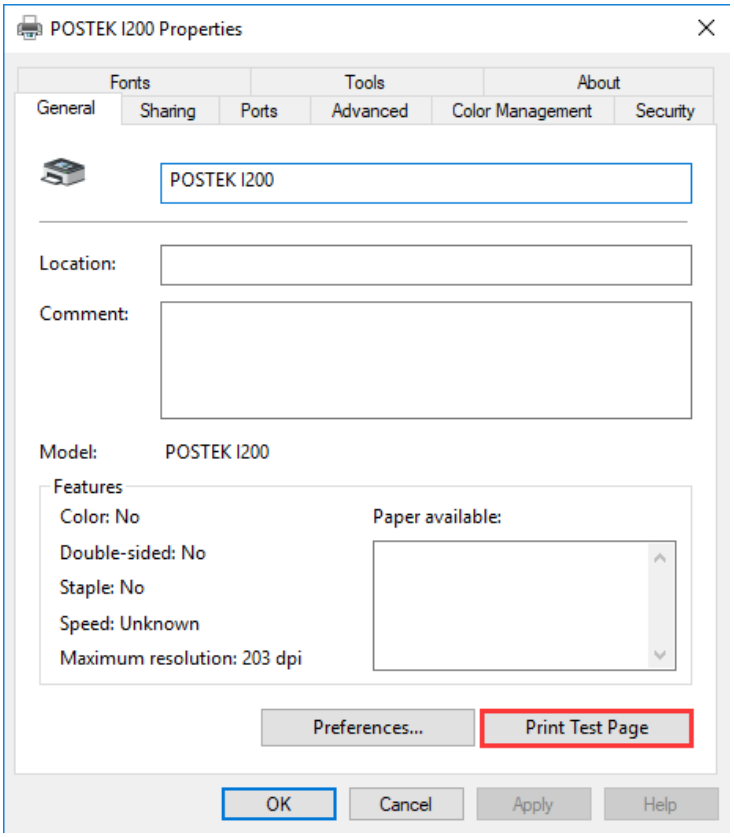

Figure 2-44 Print Test Page

2.4 Installing Label Editing Software

Each printer also comes with a BarTender UltraLite edition software. To access to the software and the directions for use, please scan the QR code on the Quick Start Guide or visit POSTEK website: http://www.postekchina.com.

Chapter 3: Operations and Settings

3.1 Basic Operations

3.1.1 Power Switch

The power switch is on the back panel of the printer. The symbols on the switch are defined as follows:
— - ON
O - OFF

3.1.2 The Front Panel

The Front Panel of the I printer consists of:

- Three LED Indicators: [MEDIA], [READY] and [RIBBON]
- Five multi-function buttons: [PAUSE], [FEED], [CANCEL], [MEDIA CALIBRATION] and [MENU]
- A graphic dot matrix LCD display

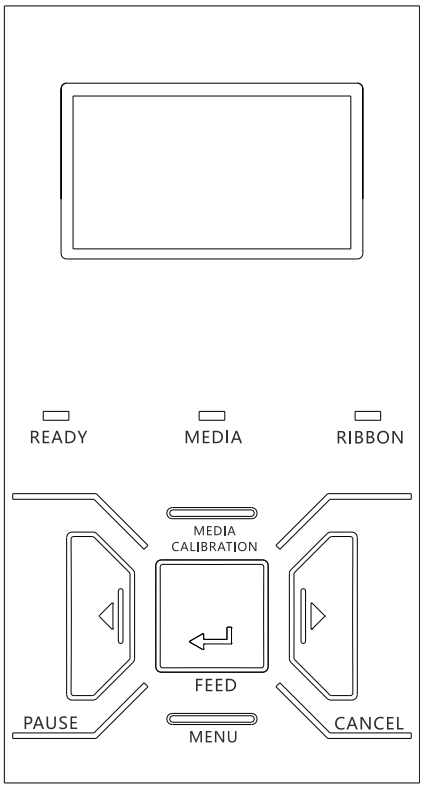

Figure 3-1 Front Panel

3.1.2.1 LED Indicators

The LED indicator on the front of the printer shows the different states that the printer is in, please refer to Table 3-1 below for details.

Table 3-1 LED Indicator Description

LED Indicator	Description
[READY]	• If the indicator is on, the printer is ready and waiting for user input. • If only the [READY] indicator is blinking, then the printer is paused and awaiting further instruction.
[MEDIA]	• If the indicator is on, it means the printer is at a normal working state. • If both the [READY] and [MEDIA] indicators are blinking, then the printer detected media out.
[RIBBON]	• If the indicator is on, it means the printer is using thermal transfer mode (Requires ribbon). • If the indicator is off, it means the printer is using direct thermal mode (No ribbon required). • If both [READY] and [RIBBON] indicators are blinking, then the printer detected ribbon out.

3.1.2.2 Panel Buttons

The five buttons have different functions based on the mode of the operation is performed, please refer to Table 3-2 for details.

Table 3-2 Panel Button Description

Mode	Function
[FEED]	• When printer is in a standby state, press once and the printer will feed one label. • When printer is in an error state, press to choose Reprint or Print Next.
[PAUSE]	• When printer is in working or standby state, press once to pause the printer. • When printer is in pause state, press once to resume.
[CANCEL]	• During printing, press to cancel the current print job. • When printer is in an error state, and there is no print job in process, press to clear the error report. • When printer is in an error state, and there is unfinished print job in process, press to cancel the print job.
[MEDIA CALIBRATION]	Performs media sensor calibration
[MENU]	Enter/exit setup menu

3.1.2.3 LCD Panel Operation

The LCD can display the printer's status, total print quantities, error messages, and is also convenient when configuring the printer. Table 3-3 are typical examples of LCD displays.

Table 3-3 Menu Example Description

Main Menu	Description
READY [203DPI] TOTAL: 888 VERSION: 2.02 2016-01-01 08:08:08	Ready Status [Resolution] Total printed labels count, it will be reset to 0 if restart the printer. Firmware Version Current Date Current Time
PAUSE 100/888 2016-01-01 08:08:08	Printing Pause Status Remaining labels (pages) count of the current job / Total labels (pages) qty of the current job, it will be reset to 0 if restart the printer. Current Date Current Time
◄ XXXX ►  01/40	Setting the main menu The first row shows the variable selected. 01/40 indicates a total of 40 settings with the 1st item now selected.
XXXX  12	Setting an item The first row shows the variable selected. Some items include a progress bar. 12 indicates the current setting value of 12.

3.1.3 Advanced Functions

3.1.3.1 Media Sensor Calibration

When the printer is on standby, press the [MEDIA CALIBRATION] button, the printer will automatically feed labels and the media sensor calibration is done. During this process, all three indicators will start blinking. When all three indicators stop blinking and return to a steady state, the media sensor calibration is complete.

NOTE

- *When it is the first time installing the media or when changing to a different type of media, media sensor calibration must be performed.*
- *No calibration is needed when using continuous media.*

3.1.3.2 Obtaining Printer Configuration Information

When the printer is on standby, press and hold the [PAUSE] button (hold for around 4 seconds), all three indicators will blink once and then return to a steady state, the printer will print a self-test page with detailed information regarding the printer's configuration then return to standby.

The information includes: the printer model, firmware version, hardware parameters and current status, thermal transfer/direct thermal mode, font list, etc.

3.1.3.3 Reset to Factory Settings

When the printer is on standby, press and hold the [CANCEL] button (hold for around 4 seconds), all three indicators will start blinking (if no further input is detected for the next 8 seconds then the printer will return to standby). Release the [CANCEL] button and press it again to initiate the reset process, the [READY] indicator will be off and the rest two indicators will blink simultaneously, when all three indicators are lit and return to a steady state, the reset process is complete.

NOTE

The number of printed labels (pcs) and printed length (m) cannot be restored to factory default value.

3.2 Setting Menu

3.2.1 Button functions

Table 3-4 Button Function Description

Button	Function	Description
[MENU]	Enter/exit	Enter/exit setup mode
[PAUSE]	Item/Parameter Selection	Descending Item/Parameter selection
[CANCEL]	Item/Parameter Selection	Increasing Item/Parameter selection
[FEED]	Confirmation	Confirm selection
[PAUSE] + [FEED]	Enter setup mode while printing	Press PAUSE to pause the current printing job, then press and hold FEED for about 4 seconds, then the LCD will display a menu for printer setup.

3.2.2 Main menu

CAUTION

The Printhead needs to be closed before adjustment can be made to the settings menu.

Items to be set and operating guide, see Table 3-5.

Table 3-5 Main Menu Description

Main Menu	Description
EXIT	Exit the setup menu.
PRINT DARKNESS	When set as "0", the printer will either follow the command settings or the default values (10/20 or 15/30 for PRINT DARKNESS, 2ips for PRINT SPEED) when the relevant command settings are absent; When set as other values, the printer will follow the settings in the printer LCD menu, command settings will not take effect.
PRINT SPEED	
LANGUAGE	Options: CHINESE, ENGLISH, ESPA Default: ENGLISH
PRINT MODE	Options: THERMAL TRANSFER, DIRECT THERMAL Default: THERMAL TRANSFER
TEAR MODE	Tear-off Mode Options: ENABLE, DISABLE Default: ENABLE
CUT MODE	Cutter Mode/Peeler Mode Options: ENABLE, DISABLE Default: DISABLE NOTE *Cutter and Peeler Mode are built upon Tear-off Mode, switching Cutter or Peeler Mode on will automatically enable Tear-off Mode.*
PEEL MODE	

Main Menu	Description
SENSOR TYPE	Media Sensor Type Options: TRANSMISSIVE, LOWER REFLECTIVE, UPPER REFLECTIVE Default: TRANSMISSIVE
BAUD RATE	Options: 9600, 19200, 38400, 57600, 115200 Default: 38400
PARITY BIT	Options: NONE, ODD, EVEN Default: NONE
DATA BITS	Options: 7 BITS, 8 BITS Default: 8 BITS
TEAR OFFSET	Adjust the media stop position over the tear-off bar after printing under tear-off mode. • Set higher values to move the media stop position out. • Set lower values to move the media stop position in. 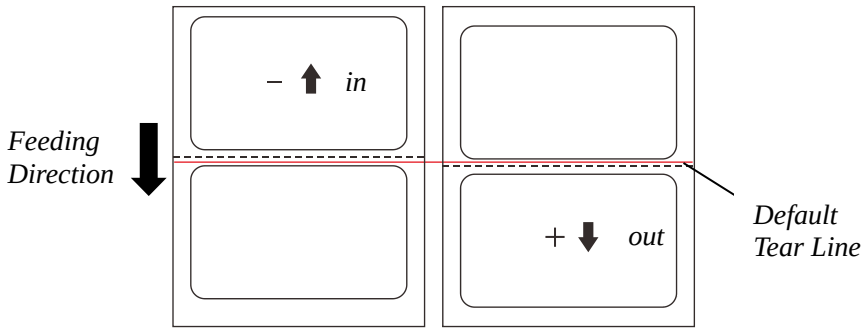
FEED OFFSET	Adjust the media stop position. • Set higher values to move the media stop position out. • Set lower values to move the media stop position in. 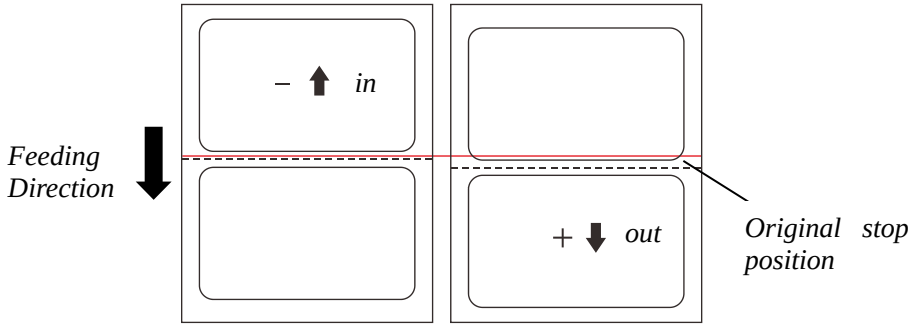
CUT OFFSET	Adjust the cut off position under cutter mode. • Set higher values to move the cut off position out. • Set lower values to move the cut off position in. 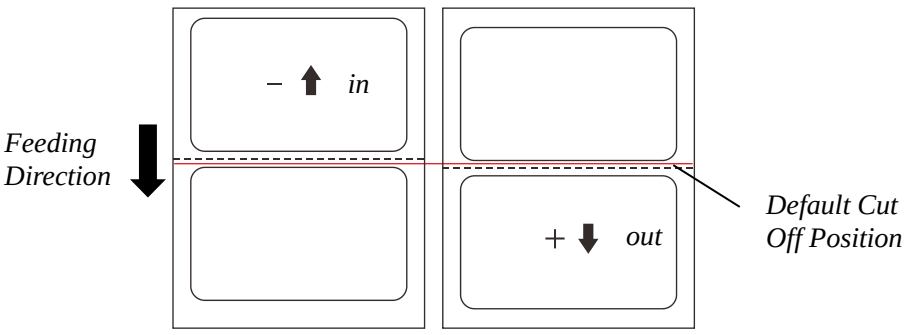

Main Menu	Description
PEEL OFFSET	Adjust the peel off position under peeler mode. • Set higher values to move the peel off position out. • Set lower values to move the peel off position in. 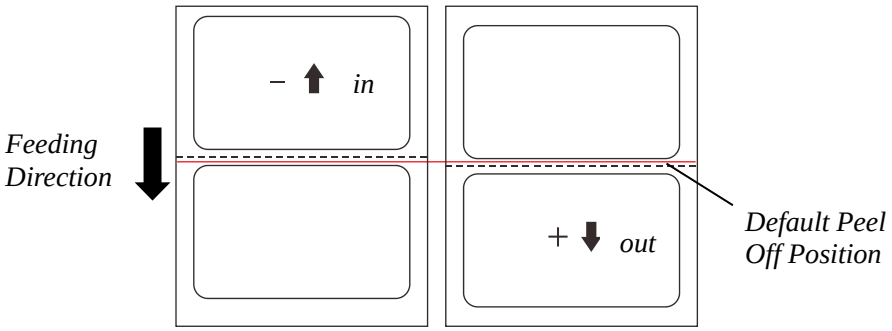
H-OFFSET	H-OFFSET adjusts the horizontal position of the printout. • Set higher values to move the printout towards right. • Set lower values to move the printout towards left. 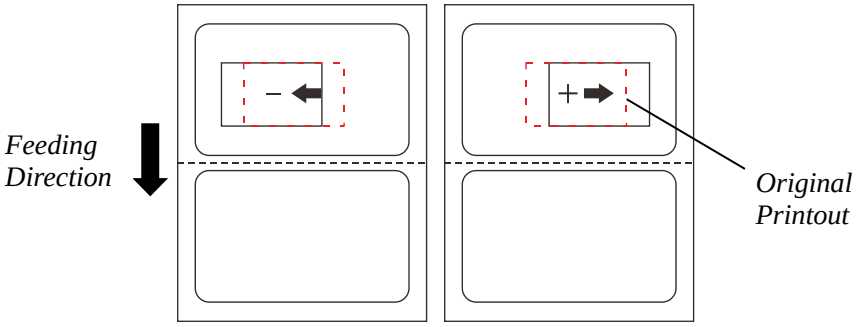
V-OFFSET	V-OFFSET adjusts the vertical position of the printout. • Set higher values to move the printout up (the printout moves in the opposite direction of feeding). • Set lower values to move the printout down (the printout moves in the direction of feeding). 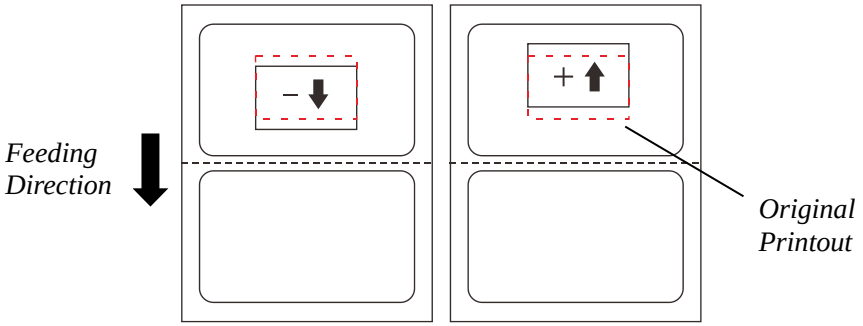 NOTE *Vertical offset can only be set to a value not less than 0.*
CUT FREQUENCY	Specify the quantity of the printed labels for each cut. Default value: 01 Range: 01 to 99
ERROR FEEDBACK	Allow or forbid the printer to send back error information to the host. When it is enabled, the printer will send back the current status information to the host via the communication port after receiving the ^ee command. Options: ENABLE, DISABLE Default: ENABLE

Main Menu	Description
IP ADDRESS	The range of XXX is 0-255, press [PAUSE/Self Test] to decrease, [CANCEL/▮▸Reset] to increase, and [FEED/Calibrate] to move to next XXX. Upon completion, pressing [FEED/Calibrate] will proceed to the "Save/Abort" screen.
SUBNET MASK	
GATEWAY	
NETWORK PORT	Set network port. Default: 9100
SET DATE	Set system date.
SET TIME	Set system time.
FONT LIST	Browse the stored fonts.
DELETE FONTS	Delete stored fonts.
CMD TYPE	Select the command type that the printer recognizes. Options: PPLE, PPLZ Default: PPLE
DHCP	After DHCP is enabled, the printer will ask for a restart. As the printer being powered on again, the LCD will prompt "DHCP CONFIGURING, PLEASE WAIT…" Normally it takes 2 minutes to finish the network settings. If failed, the printer will disable the DHCP and prompt "DHCP CONFIGURATION FAILED, PLS CHECK NETWORK CONNECTION!" Options: ENABLE, DISABLE Default: DISABLE
DUMP MODE	In dump mode, the printer will print out the data (print commands) that are sent from PC or other devices, instead of executing the print task. Options: ENABLE, DISABLE Default: DISABLE
CALIB LENGTH	Set media feeding length for calibration. Default 200, the unit is mm. NOTE *Calibration length shall be set to at least twice of the height of one label.*
STANDALONE MODE	Standalone function is available when the printer is connected to a keyboard or scanner. Label form needs to be downloaded to the FLASH ROM in advance.
DELETE FORMS	Clear the forms downloaded to the printer.
DELETE IMAGES	Clear the graphics downloaded to the printer.
LOAD DEFAULT	Restore factory default settings.
BITMAP CONVERT*	Set the bitmap size. When set as NONE, the bitmap would be in normal size. When set as 300->600, the bitmap size would be enlarged by 1 time; When set as 600->300, the bitmap size would be reduced by 1 time. Options: NONE, 300->600, 600->300 Default: NONE

Main Menu	Description
SCALE CONVERT	Set the size of the printout. When set as NONE, the print contents would be in normal size; When set as X0.5, the print contents would be reduced by 1 time; When set as X2, the print contents would be enlarged by 1 time. Options: NONE, X0.5, X2 Default: NONE

** Only available for 300dpi and 600dpi printers.*

3.3 Mechanical Adjustments

3.3.1 Adjusting the Media Sensor

CAUTION

- *When it is the first time installing the media or when changing to a different type of media, media sensor calibration must be performed.*
- *No calibration is needed when using continuous media.*

1. Turn the Lever counter clockwise to open the Printhead. Loosen the Thumbscrew and move the Media Sensor Assembly to the appropriate position, as shown in Figure 3-2. Adjust the Media Sensor to ensure that its position is directly over the gap, hole, notch or black mark.

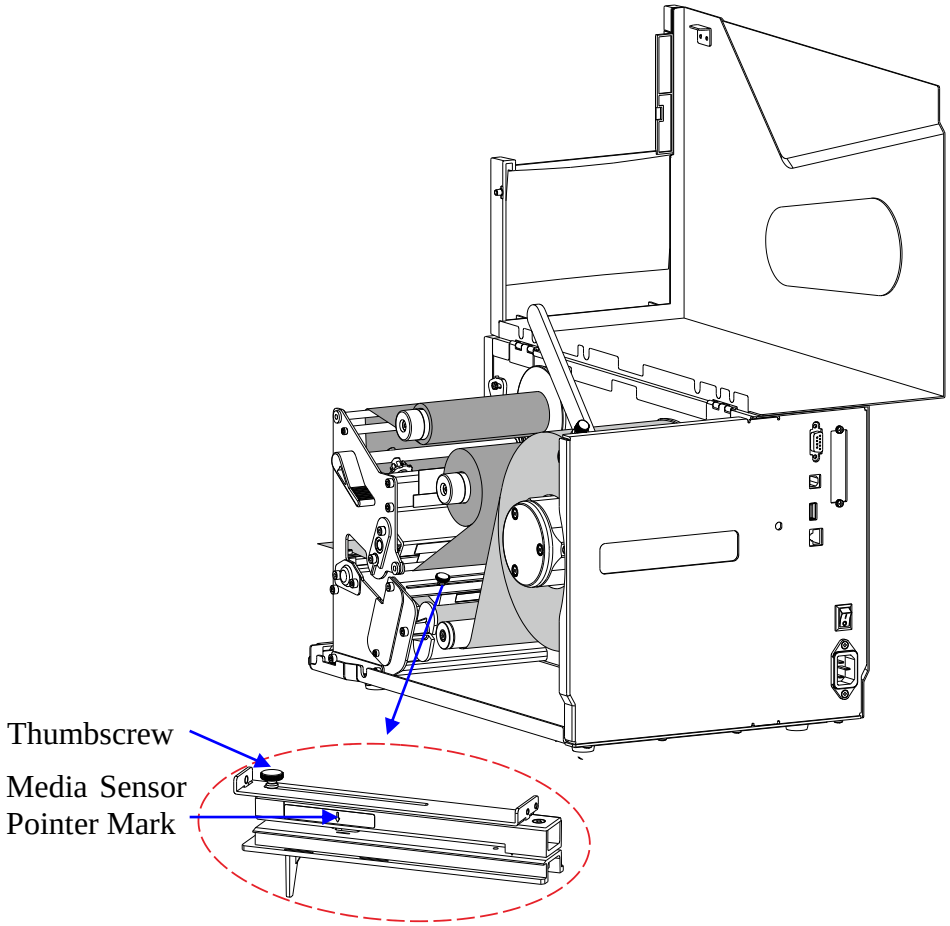

Figure 3-2 Adjust the Media Sensor Position

NOTE

- *The printer has three types of media sensors:*
  - *Transmissive sensor, detects gap, hole or notch between labels;*
  - *Lower reflective sensor, detects black mark on the backside of the media;*
  - *Upper reflective sensor, detects black mark on the front side of the media.*

  The way to set the sensor type can be found in Section 3.2 Setting Menu.
- *When roll media is produced, the media end would be fixed on the media core with duct tape or scotch tape. If your printer cannot detect the Media Out signal well, please refer to Figure 3-3 to check the position of the tape.*

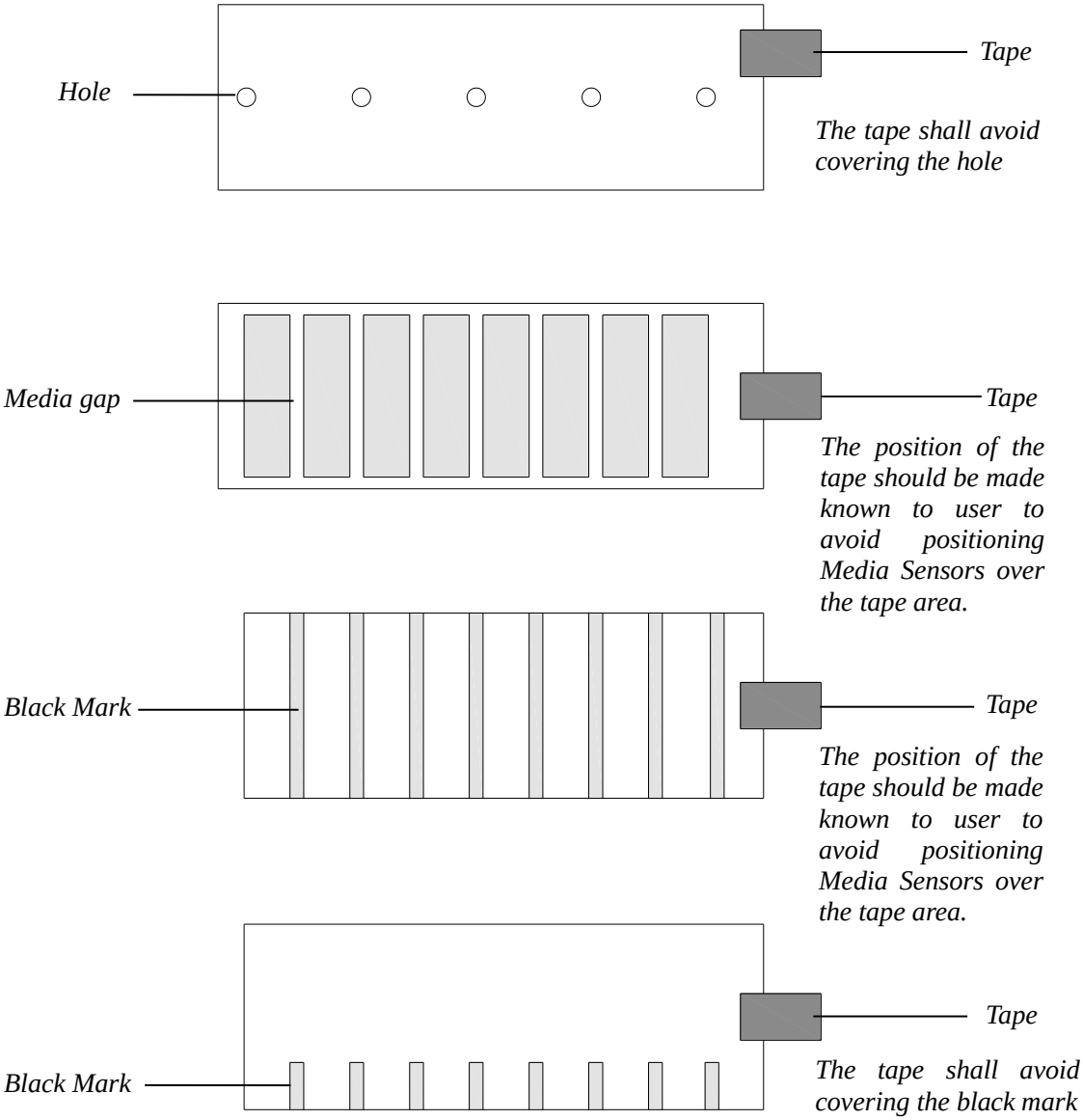

Figure 3-3 End-fixing Tape Position

2. Turn the Lever clockwise to lock the Printhead in place. Press the [MEDIA CALIBRATION] button, the printer will automatically feed labels and the media sensor calibration is done.

3.3.2 Adjusting the Printhead Pressure and Balance

CAUTION

A qualified technician is required to adjust the printhead pressure or printhead balance. Printhead damage or poor printout quality may occur if the procedure is not done correctly.

The printhead pressure comes from two spring assemblies, the force generated by the two springs is transferred to the printhead via two Pressure Bars, as shown in Figure 3-4.

Adjusting the position of a Pressure Bar changes the pressure across the printhead and platen roller, thus it has immediate impact on the evenness of printout.

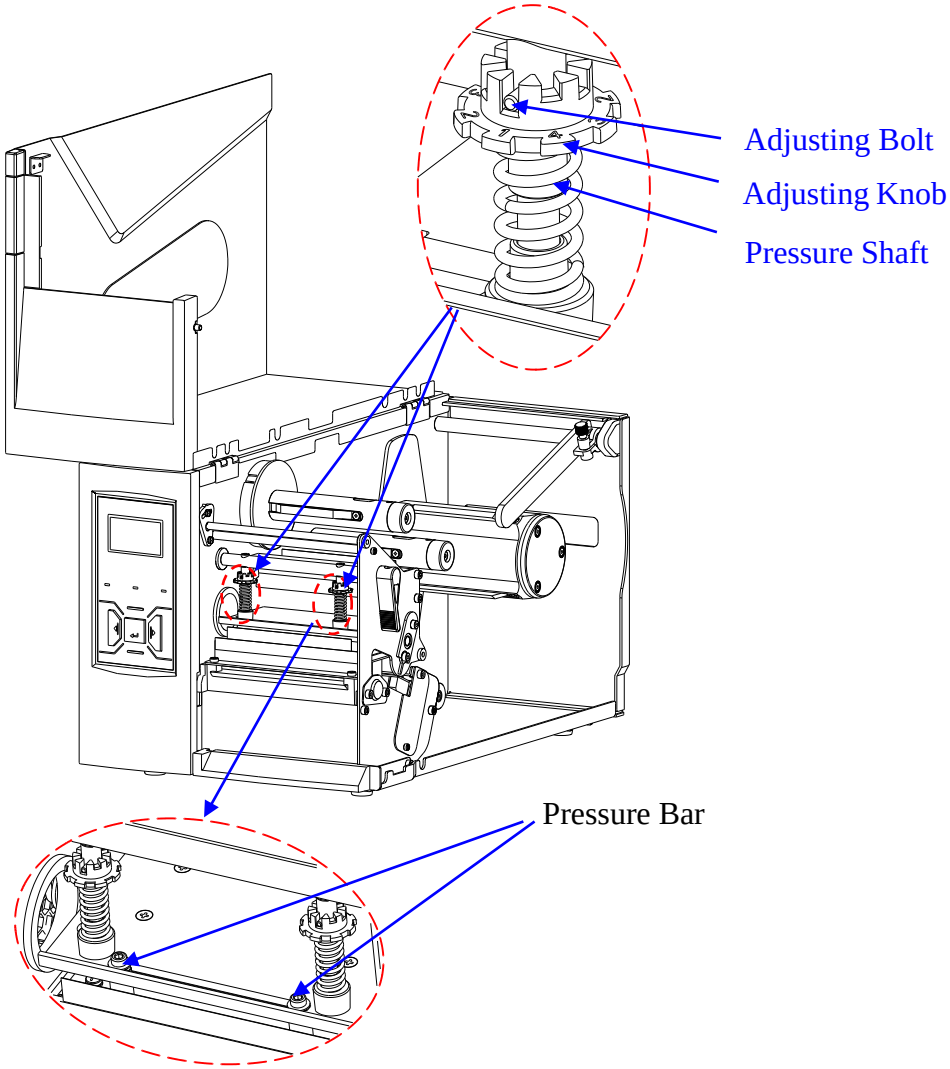

Figure 3-4 Printhead Pressure and Balance Adjustment

Follow the steps below to adjust the printhead pressure:

1. Press down the Adjusting Knob, and twist the Adjusting Knob to align the numbered pressure level with the Adjusting Bolt to apply different level of pressure (The bigger the number, the more pressure the spring assembly brings to the printhead).
2. Repeat step 1 on another spring assembly to complete the adjustment of the printhead pressure.

Follow the steps below to adjust the printhead balance:

1. To adjust the balance of the printhead, only one Pressure Bar's position needs to be adjusted. Moving the Pressure Bar to the left increases the left side pressure of the printhead; moving the Pressure Bar to the right increases the right side pressure of the printhead. Always place one Pressure Bar at end position when making adjustments. Choose the left side or right side Pressure Bar to adjust, then slightly loosen the Pressure Bar by using the Allen wrench bundled with the printer.
2. Slide the Pressure Bar to an estimated position and fasten it with the Allen wrench.
3. Test print to check the evenness of the printout quality.
4. Repeat steps 2 and 3 until even printout is achieved.

3.3.3 Adjusting the Ribbon Tension

Tension on both ribbon supply and ribbon take-up spindles can be adjusted, refer to Figure 3-5, by following the steps below.

1. Slightly loosen the Setscrew with the Allen wrench bundled with the printer.
2. To increase the tension, turn the Tension Adjustment Screw clockwise by the Allen wrench; to decrease the tension, turn it counterclockwise. The tension level can be read from the Tension Level Indicator. When tension is set at the desired level, fasten the Setscrew to complete the adjustment.

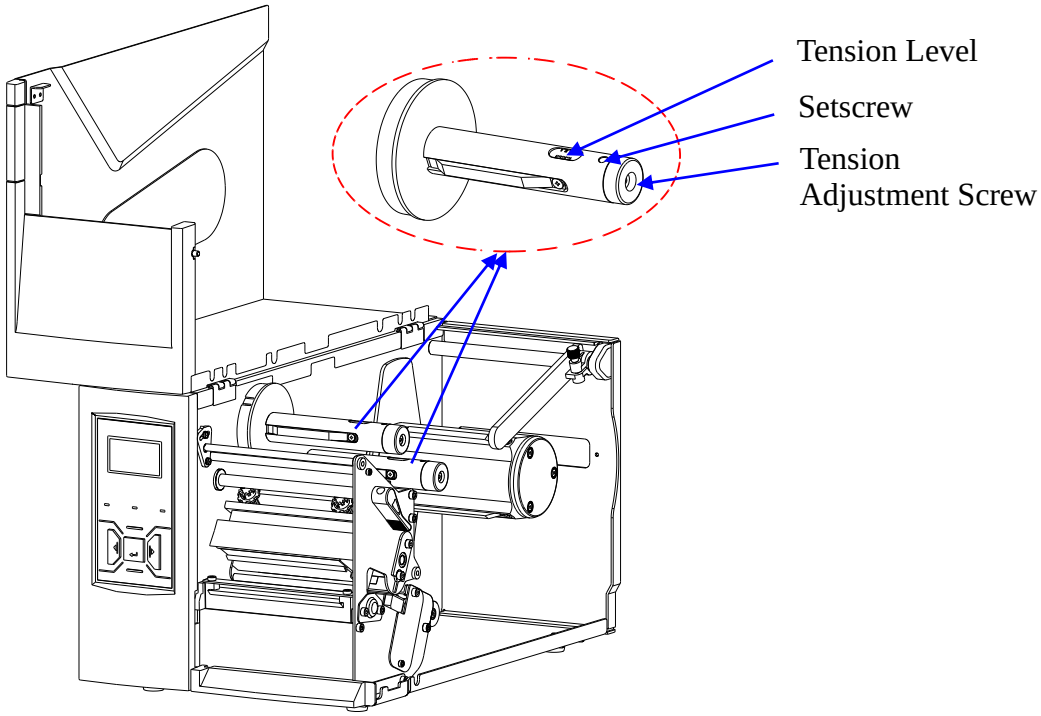

Figure 3-5 Ribbon Tension Adjustment

Chapter 4: Maintenance

WARNING

- *Make sure the printer is powered off before performing maintenance operations.*
- *The Printhead may be hot due to recent printing. Wait until the Printhead cools before performing maintenance.*
- *Use only anhydrous isopropyl alcohol to clean the print head.*

4.1 Cleaning the Printhead

Due to the Printhead's functionality in the printer, it comes into contact with consumables and therefore is susceptible to dirt accumulation. If dirt is not removed, the Printhead may be damaged. To ensure longevity of the Printhead, follow the recommended maintenance guidelines below:

Clean the Printhead after every (1) roll of ribbon use or every (3) rolls of label media use. To clean the Printhead:

1. Turn off the printer.
2. Lift to open the right cover of the printer.
3. Turn the Lever counter clockwise to open the Printhead.
4. Remove the ribbon (if applicable) and media.
5. Use a cotton swab dipped in anhydrous isopropyl alcohol. Wipe the Printhead from end to end.
6. Allow a few seconds for the Printhead to dry before using the printer again.

4.2 Cleaning the Platen Roller

The roller can accumulate debris from consumables, such as dirt, sand, dust or glue. To ensure longevity of the Platen Roller, follow the recommended maintenance guidelines below:

Clean the Platen Roller after every (3) rolls of label media used. To clean the Platen Roller:

1. Turn off the printer.
1. Lift to open the right cover of the printer.
2. Turn the Lever counter clockwise to open the Printhead.
3. Remove the ribbon (if applicable) and media.
4. Use a cotton swab dipped in anhydrous isopropyl alcohol. Rub the swab along the Platen Roller from end to end while rotating the roller, until the swab no longer accumulates ink or debris.

4.3 Cleaning the Printer Interior

Over time, the printer's interior may collect dust or debris from the consumables. It is advised to periodically clean the printer's interior in order to prevent the accumulated debris from damaging internal parts.

To clean the printer interior, use a cotton swabs dipped into anhydrous isopropyl alcohol and remove any debris.

4.4 Cleaning the Sensors

Over time, dust and debris will accumulate over the sensors and affect their performance, to ensure proper detection, please clean the sensors with cotton swabs dipped into anhydrous isopropyl alcohol periodically.

Chapter 5: Troubleshooting

Occasionally situations occur that require some troubleshooting. Possible issues and potential solutions are listed in this section. While not every situation is addressed, you may find some of these tips useful.

5.1 LCD Error Messages

The LCD displays messages when there is an error. See Table 5-1 for LCD errors, the possible causes, and the recommended solutions.

Table 5-1 Error Messages

LCD Display	Possible Cause	Recommended Solution
PRINTHEAD OPEN	The printhead is unlocked.	Turn the Lever clockwise to lock the Printhead in place.
MEDIA ERROR	Media not loaded correctly	• Check and confirm the media has been loaded correctly • Check the position of the media sensor and confirm it could detect the media gap, hole, notch, or black mark • Calibrate the media sensor. Please refer to 2.2.4 Loading the Media
	Media sensor is not aligned to media gap/ hole/notch/black mark	
	Media Sensor Calibration not performed	
	Out of media	Replace the media
	Media jam	Clean up media jam
	Media sensor is dirty	Clean the media sensor
	Media sensor failure	Replace the media sensor, please contact an authorized POSTEK service provider for technical support.
RIBBON ERROR	Out of ribbon	Replace the ribbon
	Ribbon slides against the label	Reduce the tension on the ribbon supply side, refer to 3.3.3 Adjusting the Ribbon Tension
	Ribbon sensor failure	Replace the ribbon sensor, please contact an authorized POSTEK service provider for technical support.
OUT OF RIBBON	Out of ribbon	Load a new roll of ribbon
CUTTER ERROR	Cutter Mode enabled with no cutter installed	Disable the Cutter Mode, refer to 3.2.2 Main menu
	Cutter control board failure	Replace the cutter control board, please contact an authorized POSTEK service provider for technical
MEMORY ERROR	Problems occurred with printer's flash or RAM memory during printing or executing printing data/command.	Please restart the printer, and then disable the "DUMP MODE" setting from the main menu. Or contact an authorized POSTEK service provider for technical support if problems exist.

LCD Display	Possible Cause	Recommended Solution
DATA ERROR	The labels' data has been sent to printer but cannot be identified due to the invalid format or syntax.	Please follow the command syntax or data format in the command manual to edit data, and then resend it to the printer.

5.2 LED Error Indications

Typically, when the printer is not functioning, one or two of the three indicators will begin blinking. The possible situations addressed by the status of the three indicator indicators are listed in Table 5-2.

Table 5-2 LED Error Indications

Indication	Possible Cause	Solutions	Important Notice
[READY] and [MEDIA] indicators blink simultaneously	Media sensor can't detect media	• Check and confirm the media has been loaded correctly • Check the position of the media sensor and confirm it could detect the media gap, hole, notch or black mark • Calibrate the media sensor	If the media being used is continuous media (no locator present on the label). Then please set the media to Continuous Media in the printer driver settings.
	Media ran out	Load a new roll of media	If the printer has not been powered off and the print job has not been finished, after clearing the error: • Press [FEED] button to select Reprint or Print Next. • Press [CANCEL] button to choose whether to cancel the print job or not.
	Media jammed	Clear the jam	
	Media sensor is dirty	Clean the Media sensor	
	Media sensor is out of order	Contact an authorized POSTEK service provider for technical support.	
[READY] and [RIBBON] indicators blink simultaneously	Out of ribbon	Load a new roll of ribbon	
	Ribbon jammed	Make sure the ribbon follows a steady and smooth path	
	Ribbon sensor is dirty	Clean the ribbon sensor	
	Ribbon sensor is out of order	Contact an authorized POSTEK service provider for technical support.	
Only [READY] indicator blinks	The printer is in a paused state	Press the [PAUSE] button to resume	
	The printhead is unlocked	Turn the Lever clockwise to lock the Printhead in place	
	Cutter error	Please check whether the cutter is installed correctly, for details, please contact an authorized POSTEK service provider for technical support.	
	Memory overflow	• Restart the printer • Reset the printer	

5.3 Miscellaneous Issues

Table 5-3 identifies miscellaneous issues with the printer, the possible causes, and the recommended solutions.

Table 5-3 Miscellaneous Printer Issues

Problem	Possible Cause	Recommended Solution
Poor Printing Quality	Incorrect Darkness setting	Modify the Darkness value in the computer software or change the Darkness setting on the LCD screen, refer to 3.2.2 Main menu
	Media and ribbon are not properly matched	Replace the media and/or the ribbon
	Insufficient printhead pressure	Adjust the printhead pressure, refer to 3.3.2 Adjusting the Printhead Pressure and Balance
Data Sent but Not Printing	The driver is incorrect.	Ensure the correct driver is chosen in the label software
	Memory overflow	Reset the printer.
Horizontally displaced print	Media not well guided	Reload the media, refer to 2.2.4 Loading the Media
	Unbalanced printhead pressure	Adjust the printhead pressure and balance, refer to 3.3.2 Adjusting the Printhead Pressure and Balance
Skipped labels	Media Sensor Calibration not performed	Press the [MEDIA CALIBRATION] button to perform Media Sensor Calibration
	Incorrect page setup in the computer software	Correct the page setup values in the software
	Incorrect media sensor type	Select the right sensor type, refer to 3.2.2 Main menu
Print blank pages	Ribbon loaded incorrectly	Reload the ribbon. Refer to 2.2.3 Loading the Ribbon
Partial blurry prints	Unbalanced printhead pressure	Adjust the printhead pressure and balance, refer to 3.3.2 Adjusting the Printhead Pressure and Balance
Vertical blank lines in print	Dirty printhead	Clean the printhead
	Damaged heating elements on the printhead	Replace the printhead, please contact an authorized POSTEK service provider for technical support.
Ribbon take-up slack or stopped	Low torque on ribbon take-up spindle	Increase the ribbon take-up tension, refer to 3.3.3 Adjusting the Ribbon Tension
Ribbon slides against media	Torque too high on ribbon supply spindle	Reduce the ribbon supply tension, refer to 3.3.3 Adjusting the Ribbon Tension
Dirty printouts	Adhesive bleed	Change the media roll
Printouts slanted	Label not squarely die cut	Change the media roll
	Media not well guided	Reload the media, refer to 2.2.4 Loading the Media
Failure saving settings	Firmware issue	Reset the printer to factory default settings
Compressed printouts	Print speed too high for the media being used	Reduce the print speed, refer to 3.2.2 Main menu
Data Sent but Not Printing	The driver is incorrect.	Ensure the correct driver is chosen in the label software.
	Memory overflow	Reset the printer.

NOTE

For errors not listed here, please contact an authorized POSTEK Service Provider for further assistance.

Appendix A: Interface Specifications

The RS232 connector on the printer is a DB9F:

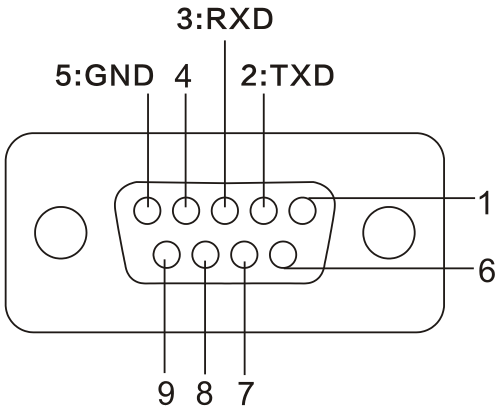

Number	Description	Definition
1	/	/
2	Out	TX
3	In	RX
4	/	/
5	-	Ground
6	/	/
7	/	/
8	/	/
9	/	/

Baud rate: 9600, 19200, 38400, 57600 and 115200
Data format: 8 data bits, 1 start bit or 1 stop bit.
Flow control: None. If you are using software or drivers under the Windows environment, the flow control must be set to "hardware".

Any communications port can transmit data from the host (RS232, Ethernet, or USB). Preliminary communications settings are not required since the printer will automatically detect which port is active.

CAUTION

Never send data from 2 ports at the same time. Data cannot be sent to more than one port simultaneously or data corruption and print errors may occur.

Appendix B: ASCII Table

	0	1	2	3	4	5	6	7
0	NUL			0	@	P	`	p
1	SOH	XON	!	1	A	Q	a	q
2	STX		"	2	B	R	b	r
3		XOFF	#	3	C	S	c	s
4			$	4	D	T	d	t
5		NAK	%	5	E	U	e	u
6	ACK		&	6	F	V	f	v
7	BEL		'	7	G	W	g	w
8	BS		(	8	H	X	h	x
9			)	9	I	Y	i	y
A	LF		*	:	J	Z	j	z
B		ESC	+	;	K	[	k	{
C	FF		,	<	L	\	l	|
D	CR		-	=	M	]	m	}
E	SO	RS	.	>	N	^	n	~
F	SI	US	/	?	O	_	o	DEL
	0	**1**	**2**	**3**	**4**	**5**	**6**	**7**

NOTE

The € sign is included in the embedded table at DEC128 or HEX 80.

POSTEK

RUGGED PARTS, DURABLE MACHINES