POSTEK

RUGGED PARTS, DURABLE MACHINES

User's Manual

Simplified Industrial

Barcode Label Printer

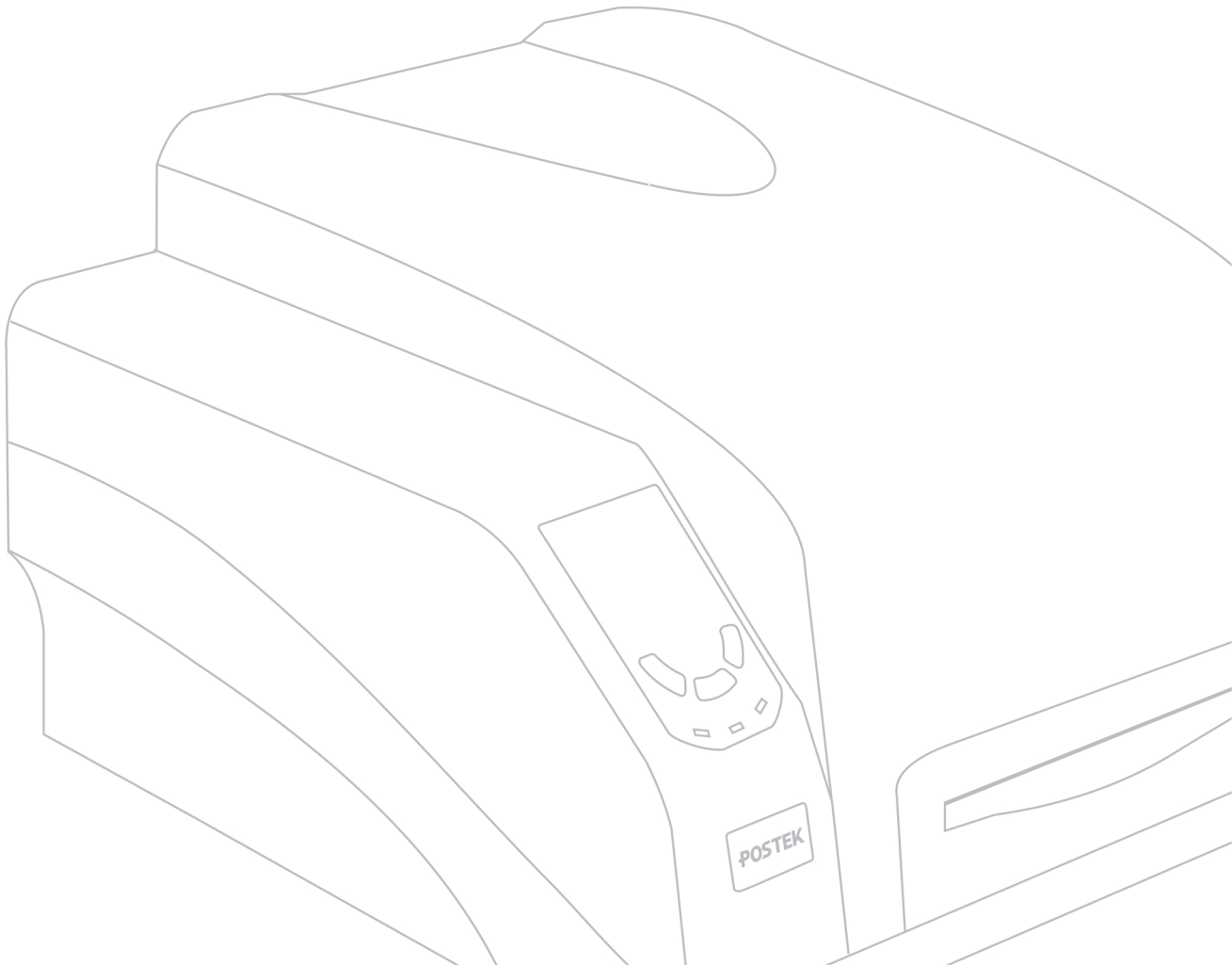

FCC Notice

This device complies with Part 15 of the FCC Rules. Operation is subject to the following two conditions: (1) this device may not cause harmful interference, and (2) this device must accept any interference received, including interference that may cause undesired operation.

This equipment may generate, use and/or radiate radio frequency energy. If not installed and used in full accordance with this User's Manual, interference to radio communications may occur. This equipment complies with the limits for a Class A Information Technology Equipment pursuant to Part 15 of the FCC Rules, which are designed to provide reasonable protection against such interference when operated in a commercial environment. Operation of this equipment in a residential area may also cause interference. In such case the user, at his/her expense, will be required to correct the interference using whatever means necessary.

Trademarks

POSTEK is a registered trademark by POSTEK Electronics Co., Ltd.
ARM is a registered trademark of Advanced RISC Machines Ltd.
Microsoft, Windows are registered trademarks of Microsoft Corporation.

Copyright

© 2022 by Postek Electronics Co., Ltd. All rights reserved. Under the copyright laws, this manual cannot be reproduced in any form without the prior written permission of POSTEK. No patent liability is assumed, with respect to the use of the information contained herein.

Disclaimer

POSTEK barcode/RFID printers are developed and produced by Postek Electronics Co., Ltd (hereinafter as "POSTEK") with the adoption of direct thermal/thermal transfer printing and RFID encoding techniques. For thermal transfer printing, matching ribbons and media are required. Meanwhile, the wide variety of RFID chip and antenna designs make it difficult to guarantee RFID tag's 100% compatibility with POSTEK printers, to satisfy your printing needs, please consult with the local reseller(s) to choose the matching consumables for POSTEK printers.

This manual has been validated and reviewed for accuracy. The instructions and descriptions it contains are accurate for the POSTEK printer at the time of this manual's distribution. However, succeeding printers and manuals are subject to change without notice. POSTEK assumes no liability for damages incurred directly or indirectly from errors, omissions or discrepancies between the printer and this manual.

To protect your interest, and to prevent loss due to improper handling, please read the corresponding user's manual before operation, and don't use the printer during abnormal conditions. In no event shall POSTEK be liable for any damage or loss caused by human misoperation, including but not limited to loss of business profits, business interruption, loss of business information, or other pecuniary loss.

Although this manual describes and details many issues which could possibly occur, the manufacturer cannot warrant against unpredictable conditions during the printer's application. For problems such as the printer not working, missed or unclear print content, etc., POSTEK and/or its

resellers are responsible for troubleshooting (according to POSTEK Warranty Clauses). In no event shall POSTEK or the resellers involved be liable for any direct or indirect loss, including but not limited to loss of business profits, business interruption, loss of business information, or other pecuniary loss.

Important Safety Instructions

- Only qualified and trained service technicians should attempt to repair the printer.
- Do not place the printer on or near a heat source.
- Be sure that the output of the power adapter is 24VDC and your power source matches the rating listed on the power adapter. Be certain your power source is grounded.
- To avoid getting an electric shock, do not use a worn or damaged power cord. If the power cord becomes damaged or frayed, replace it immediately.
- Do not insert anything into the ventilation slots or openings on the printer.
- The printer and power adapter should never be operated in a location where either one can get wet. Personal injury may result.
- The printhead becomes hot while printing. To protect from damaging the printhead and risk of personal injury, avoid touching the printhead.
- To get increased printhead longevity and higher quality printouts, always use approved labels, tags and thermal transfer ribbons. Approved supplies can be ordered from your Postek authorized reseller.
- Static electricity that accumulates on the surface of the human body or other surfaces can damage or destroy the printhead or electronic components in this device. DO NOT touch the printhead or the electronic components with bare hands.
- Place the printer on a flat, firm, solid surface.
- Never operate in a high temperature environment.
- Turn off the power when not in use for extended periods.
- Follow all recommendations and setup instructions included in this manual.

Contents

Preface **1**

Important Notes **2**

Chapter 1: Introduction **4**

1.1 Specifications 4
1.2 Contents in the Box 5

Chapter 2: Setup and Use **6**

2.1 Main Parts and Structures 6
2.1.1 Front View 6
2.1.2 Interior View 7
2.1.3 Rear View 8
2.2 Setting up the Printer 9
2.2.1 Interface Connection 9
2.2.2 Power Connection 9
2.2.3 Loading the Ribbon 10
2.2.4 Loading the Media 14
2.3 Installing the Printer Driver 18
2.3.1 USB Port Installation 18
2.3.2 Network Port Installation 22
2.4 Installing Label Editing Software 33

Chapter 3: Operations and Settings **34**

3.1 Basic Operations 34
3.1.1 Power Switch 34
3.1.2 The Front Panel 34
3.1.3 Advanced Functions 36
3.2 Mechanical Adjustments 37
3.2.1 Adjusting the Media Sensor 37
3.2.2 Changing the Mode of Media Sensor 40
3.2.3 Adjusting the Printhead Pressure 42
3.2.4 Adjusting the Ribbon Tension 43

Chapter 4: Maintenance **44**

4.1 Cleaning the Printhead 44
4.2 Cleaning the Platen Roller 44
4.3 Cleaning the Printer Interior 45
4.4 Cleaning the Sensors 45

Chapter 5: Troubleshooting **46**

5.1 LED Error Indications 46
5.2 Miscellaneous Issues 47

Appendix A: Interface Specifications **48**

Appendix B: ASCII Table **49**

Preface

The Simplified Industrial printer is designed to provide general-purpose and high-performance printing capabilities. Boasting multiple, user-friendly functions and high performance, the printer stands out with its modern appearance and excellent functionality. Carefully designed printer units are rugged, durable and easily operated and maintained. The 32-bit embedded ARM CPU and high-tech system platform delivers the highest quality possible.

This manual explains how to set up and begin using your printer. It also provides detailed information on configuring your printer, basic operations, care and troubleshooting.

Please read this manual carefully before using the printer.

Symbol Conventions

The symbols that may be found in this document are defined as follows.

Symbol	Description
WARNING	Alerts you to a medium or low risk hazard that could, if not avoided, result in moderate or minor injury.
CAUTION	Alerts you to a potentially hazardous situation that could, if not avoided, result in equipment damage, data loss, performance deterioration, or unanticipated results.
NOTE	Provides additional information to emphasize or supplement important points in the main text.

Version

Version 1.3, published in July, 2022.

Important Notes

Please read the following passages thoroughly before proceeding.

Printhead

The thermal printhead can be easily damaged due to its precision construction. A printhead damaged by misuse is not covered under the terms of the warranty. To ensure longevity of the printhead, please note the following:

- DO NOT scrape or use tools that might damage the printhead surface.
- To protect from corroding the printhead, DO NOT touch the printhead with bare hands.
- DO NOT use thermal paper or thermal transfer ribbons which contain Na, K or Cl elements.
- Keep printhead from any form of liquid or dampness.
- Only use a cotton swab dipped in anhydrous isopropyl alcohol to clean the printhead.
- Always use high-quality consumables:
  - When the printhead module is closed, pressure is placed directly onto the printhead; dirt such as paper scraps, sand, dust and glue can scrape or damage the printhead.
  - The TPH is also easily damaged by static electricity, which may be generated by poor quality ribbons.
- Always inspect consumables for high quality before purchasing.

CAUTION

The G Series printer functions under Direct Thermal or Thermal Transfer print modes. Thermal Transfer is set as the factory default (requires ribbon for printing). However, if you need to print on Direct Thermal materials (ribbon is not required), please contact your printer supplier or service provider to reduce the printhead pressure. This can protect your printhead from early performance deterioration due to direct contact with the thermal media. Any physical printhead damage caused by direct thermal printing is not covered under warranty.

Cutter (Optional)

The printer equipped with a cutter can automatically cut the label after printing. However, automatic cutters pose a safety hazard since the blades are very sharp. To prevent injuries and cutter failures while using one of the many types of automatic cutters, please follow the safety and maintenance rules listed below:

- Before using the cutter, be sure you have been trained by a qualified individual. A written procedure covering the cutter's use is recommended.
- It is very important to choose the right cutter model for the application to ensure personal safety and prevent damage to the cutter caused by cutting wrong types of media.
- Keep loose items such as long hair, clothing, jewelry, away from the cutter.
- Don't put anything except print media inside the cutter.
- Turn off power of printer if you notice abnormality with the cutting process and alert a qualified technician to resolve the issue.
- Never cut a print media which exceeds the maximum operating conditions of the cutter.
- Not every cutter model is designed to be able to cut through adhesive. Use only the dedicated cutters to cut through adhesive materials. Even so, regular cleaning is required to remove the adhesive built up on the blades over time to prevent cutter jam.
- Routine inspection and maintenance are required to be performed by a qualified technician to keep the cutter in good working conditions.

Chapter 1: Introduction

1.1 Specifications

Model by Resolution	203DPI	300DPI
Printing Mode	Direct Thermal & Thermal Transfer	
Max Printing Speed	6ips (152.4 mm/s)	5ips (127 mm/s)
Max Printing Width	4.25″ (108 mm)	4.17″ (106 mm)
Max Printing Length	315″ (8000 mm)	157″ (4000 mm)
HEAT™ Level	I	I
Memory	8 MB FLASH ROM, 16 MB SDRAM	
Media	Width: 4.4″ (112 mm) max., 0.98″ (25 mm) min. OD: 6″ (152 mm) max. ID: 1″ (25.4 mm) min.	
Minimum Label Length	Thermal Transfer	Tear-off: 0.2″ (5 mm)
		Cutter: A150/A400: 0.79″ (20 mm)
	Direct Thermal	Tear-off: 1.10″ (28 mm)
		Cutter: A150/A400: 1.54″ (39 mm)
Media Thickness	0.003″ ~ 0.008″ (0.08 ~ 0.20 mm), including liner	
Ribbon	Width: 4.3″ (110 mm) max. Length: 984' (300 m) max. OD: 2.75″ (70 mm) max. ID: 1″ (25.4 mm)	
Media Sensor	Reflective (Adjustable) and Transmissive (Two positions)	
Fonts	Five built-in dot matrix ASCII fonts, user-downloadable TrueType Fonts	
Barcode Types	1D Barcode: Code 39, Code 93, Code 128/subset A,B,C, Codabar, Interleave 2 of 5, UPC A/E 2 and 5 add-on, EAN-13/8/128, UCC-128, etc. 2D Barcode: MaxiCode, PDF417, Data Matrix, QR Code, etc.	
Interfaces	RS-232 Serial, 10/100 M Adaptive Ethernet, USB DEVICE 2.0	
Power Adapter	Input: AC 100~240 V, 50~60 Hz Output: DC 24 V, 2.5 A	
Weight	7.72lbs (3.5 kgs)	
Dimensions	W 10.2″ (259mm) x D 13.9″ (354mm) x H 8.1″ (205 mm)	
Operating Environment	Temperature: 32° F ~ +104° F (0° C ~ 40° C) Relative humidity: 5% - 85% non condensing	
Storage Environment	Temperature: -40° F ~ +140° F (-40° C ~ 60° C) Relative humidity: 5% - 85% non condensing	
Optional Items	Centronics Parallel Port*	
	Wi-Fi, Bluetooth, Cutter, External Label Rewinder, External Media Stand, Media Guide Adapter	

HEAT™, or Heating Equilibrium Adaptive Tuning, is a POSTEK designed and developed cutting-edge technology that sets the benchmark for heat management in thermal printing. Printers equipped with HEAT™ have significant improvements in their printout clarity and print speed. The HEAT™ level represents the fineness of the heating uniformity with level I being the finest.
**Factory dependent.*

1.2 Contents in the Box

Inspect the shipping carton(s) for possible shipping damage, if damage is discovered, notify the shipping company to report the nature and extent of the damage.

Please check the items according to the Packing List. If there are any items missing, notify your authorized reseller.

Chapter 2: Setup and Use

2.1 Main Parts and Structures

2.1.1 Front View

Figure 2-1 shows the front view of the printer.

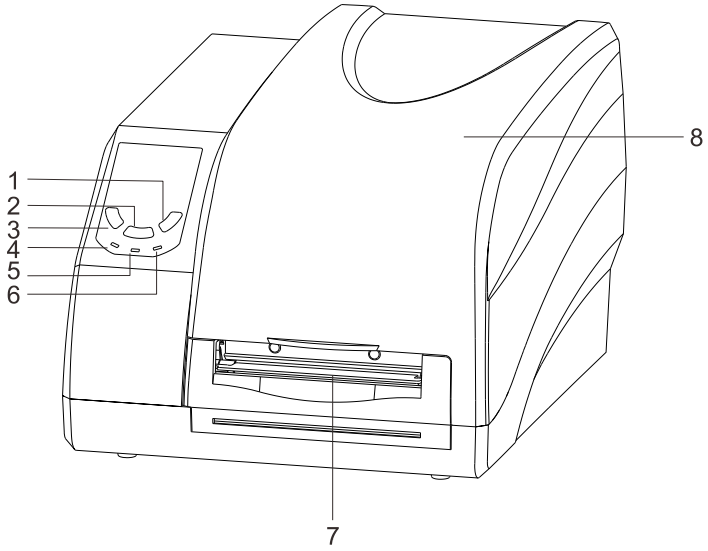

Figure 2-1 Front View

Table 2-1 Front View Description

Number	Description
1	[CANCEL/▮▸Reset] Button
2	[FEED/Calibration] Button
3	[PAUSE/Self Test] Button
4	[READY] Indicator
5	[MEDIA] Indicator
6	[RIBBON] Indicator
7	Tear-off Bar
8	Right Cover

2.1.2 Interior View

Figure 2-2 shows the detailed structure of the printer.

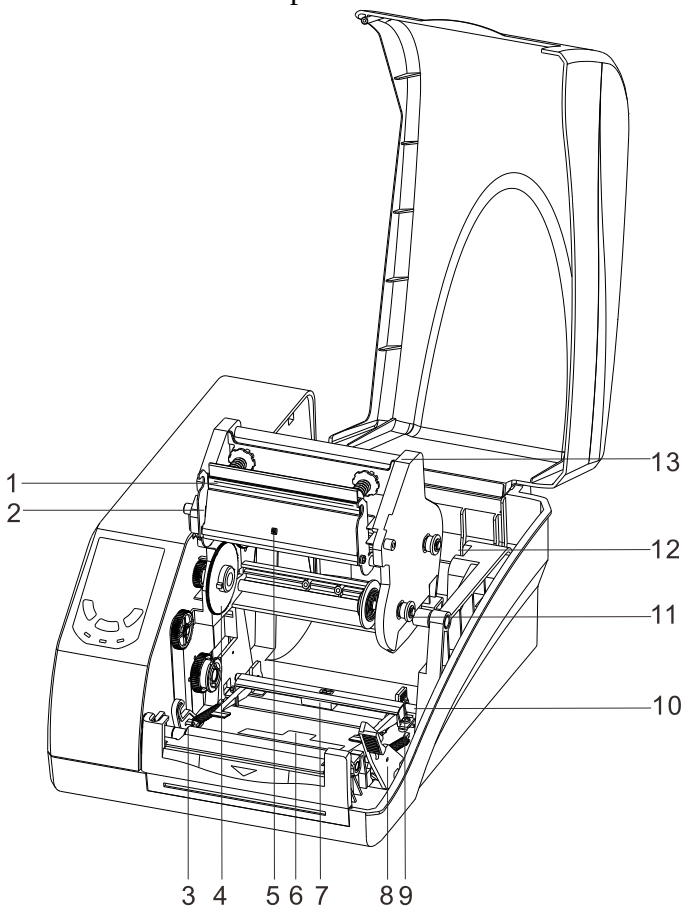

Figure 2-2 Interior View

Table 2-2 Interior View Description

Number	Description
1	Printhead
2	Printhead Bracket
3	Platen Roller
4	Left Mount_Ribbon supply
5	Ribbon End Sensor
6	Reflective Media Sensor
7	Transmissive Media Sensor
8	Printhead Release Lever
9	Media Guide
10	Media Guide Rod
11	Release Knob
12	Media Compartment
13	Printhead Module

2.1.3 Rear View

The printer is equipped with multiple interfaces. See Figure 2-3.

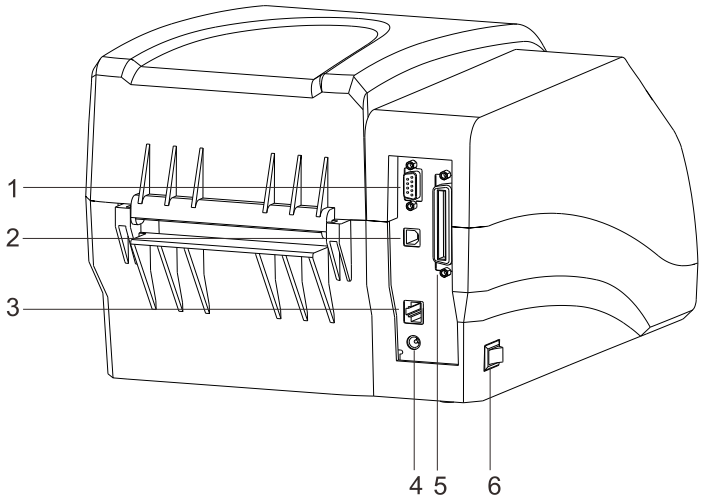

Figure 2-3 Rear View

Table 2-3 Rear View Description

Number	Description
1	RS-232 Serial Port
2	USB Device Port
3	Ethernet Port
4	DC In Port
5	Centronics Parallel Port (Extensible)
6	Power Switch

2.2 Setting up the Printer

2.2.1 Interface Connection

CAUTION

When connecting the printer to a computer via the USB interface cable, make sure to utilize the same USB port used during the driver installation process. If the same USB port is not available or unknown, please go to the printer driver's Properties Dialogue Box, and make sure the correct port is checked under the Ports tab.

The printer supports RS-232 Serial, USB Device, and 10/100 M Adaptive Ethernet interface connections. Centronics parallel connection requires an optional Centronics Parallel Interface Card.

To connect:

- Make sure the printer is powered OFF.
- The printer will identify the communication port automatically.
- The default values of the printer port can be obtained from the self-test report. (See 3.1.3 Advanced Functions/Obtaining Printer Configuration Information)
- Cable configurations for Serial (RS-232C) interface can be found in Appendix A: Interface Specifications.
- Please take the following measures to reduce cable noise.
  - Restrict the length of the interface cable to less than 6' (1.83 M) if possible.
  - Keep the interface cable separate from the power cords.

2.2.2 Power Connection

WARNING

- *Do not use the printer near liquids or corrosive chemicals.*
- *Using a wrong power adapter may cause damage to your printer. POSTEK assumes no liability for any damage in such cases. The rating for the printer is 24VDC.*

1. Make sure the printer is switched OFF.
2. Connect the power cord to the Power Adapter.
3. Connect the Power Adapter's DC output plug to the DC In Port on the back of the printer.
4. Plug the power cord into a live wall outlet.

2.2.3 Loading the Ribbon

CAUTION

- *Please make sure the ribbon you are using has the ink side out.*
- *When using a ribbon roll with a width less than 110m, please place the ribbon roll in the middle of the Ribbon Spindle corresponding to the symmetry symbol (→|←).*
- *No need to load the ribbon when printing direct thermal media.*

To install the ribbon:

1. Lift the right cover and push down the Printhead Release Lever to release the Printhead Module, see Figure 2-4.

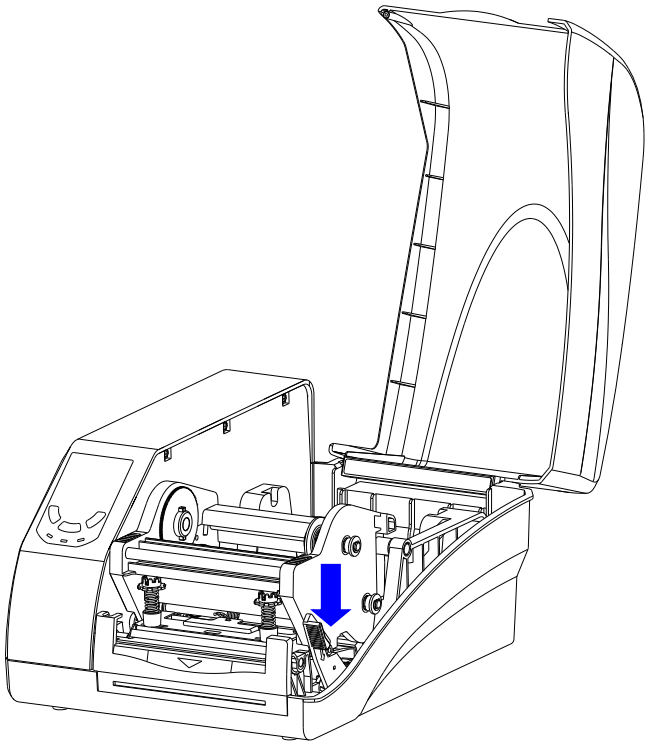

Figure 2-4 Release the Printhead Module

2. Lift the Printhead Module to expose the Ribbon Supply compartment, see Figure 2-5.

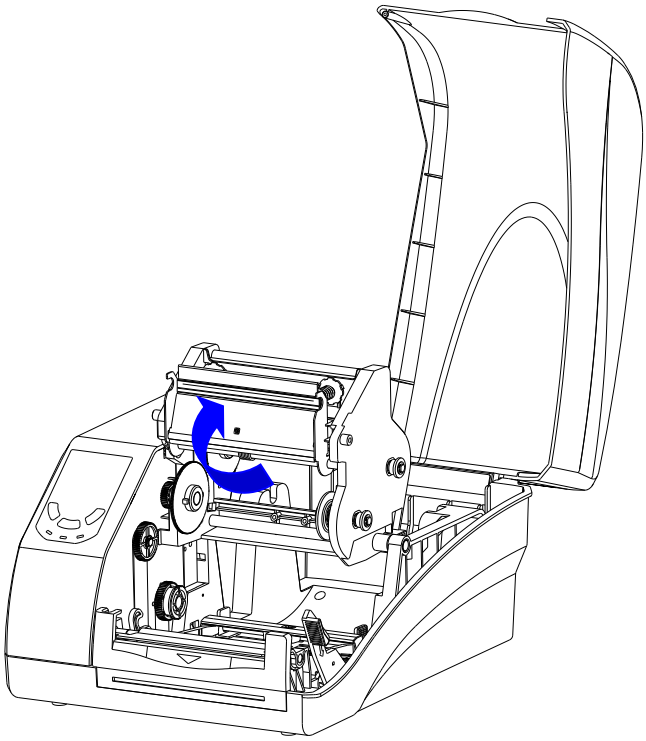

Figure 2-5 Lift the Printhead Module

3. Unwrap the ribbon package and separate the ribbon roll and the spare core.
4. Slide the ribbon roll onto one of the Ribbon Spindles and place the spare core onto the other spindle, see Figure 2-6. Make sure that the ribbon roll and the spare core are center aligned on the Ribbon Spindles.

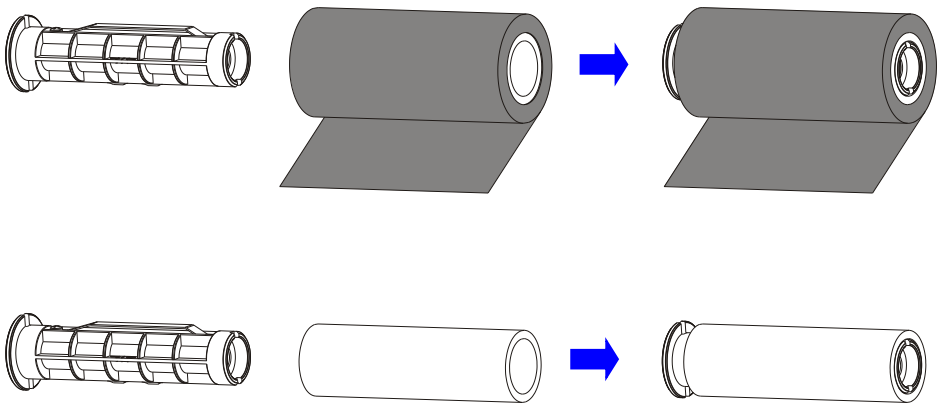

Figure 2-6 Place Ribbon Roll and Spare Core on Ribbon Spindles

5. Pull the Release Knob of the Ribbon Supply compartment outwards and place the ribbon roll in the Ribbon Supply compartment, aligning its ends with the Left Mount and the Right Mount which the Release Knob is attached to. Release the knob to secure the ribbon roll in the Ribbon Supply compartment, see Figure 2-7.

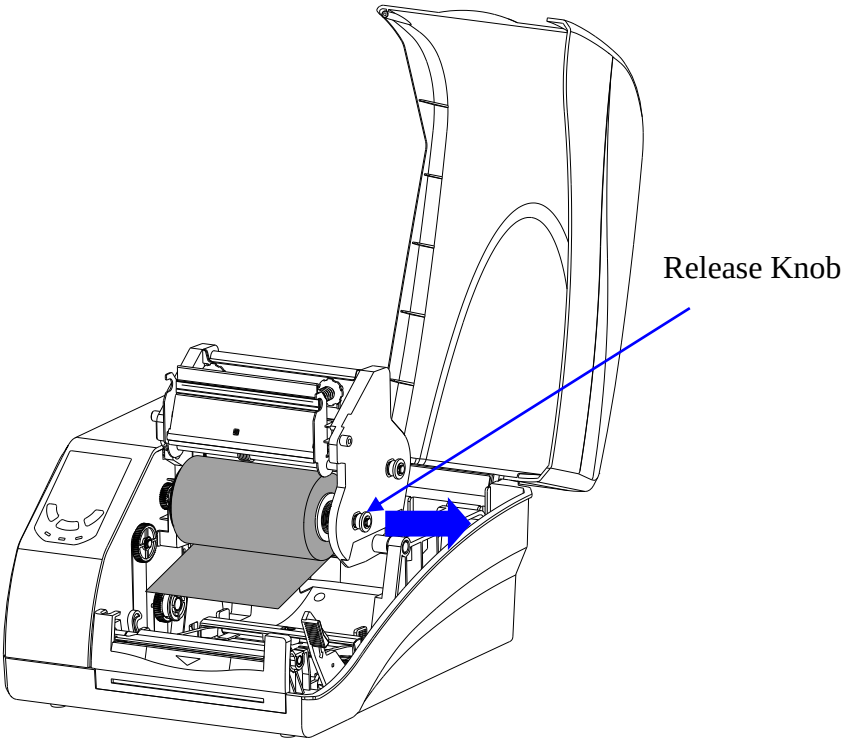

Figure 2-7 Load Ribbon Roll

6. Route the ribbon through the Printhead Module and wrap the end of the ribbon around the spare core, see Figure 2-8.

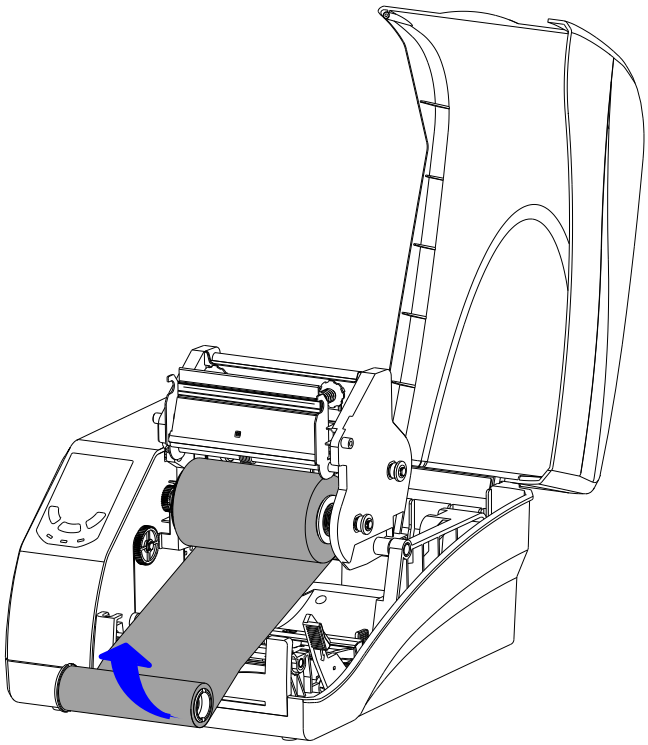

Figure 2-8 Wrap Ribbon on the Core

7. Pull the Release Knob of the Ribbon Take-up compartment outwards and load the core in the Ribbon Take-Up compartment, see Figure 2-9.

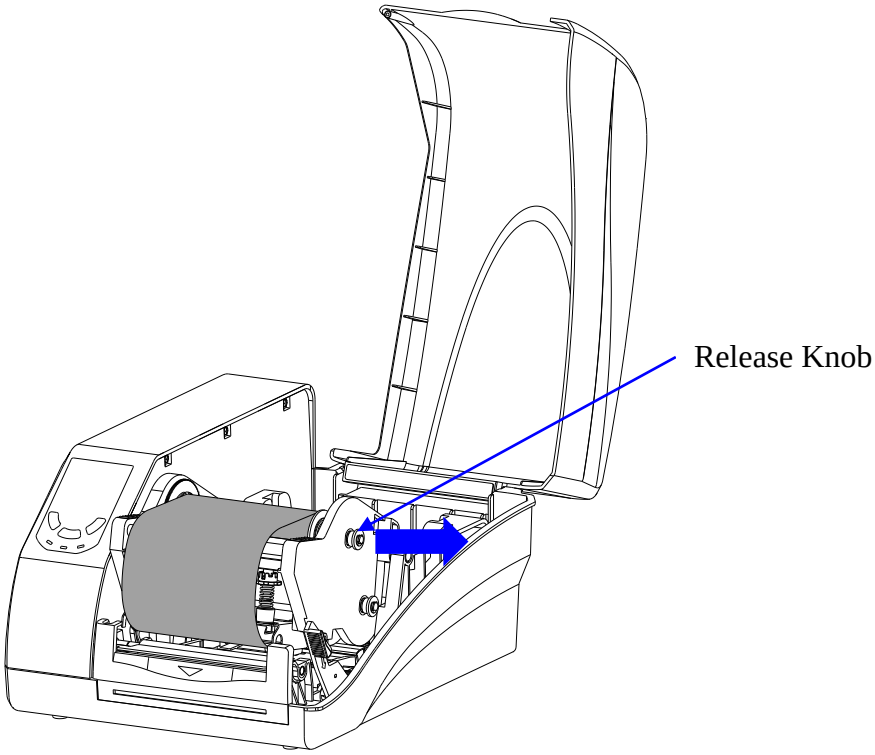

Figure 2-9 Place the Core on Ribbon Take-up

8. Turn the Left Mount of Ribbon Take-up to ensure the ribbon is tight and smooth, see Figure 2-10.

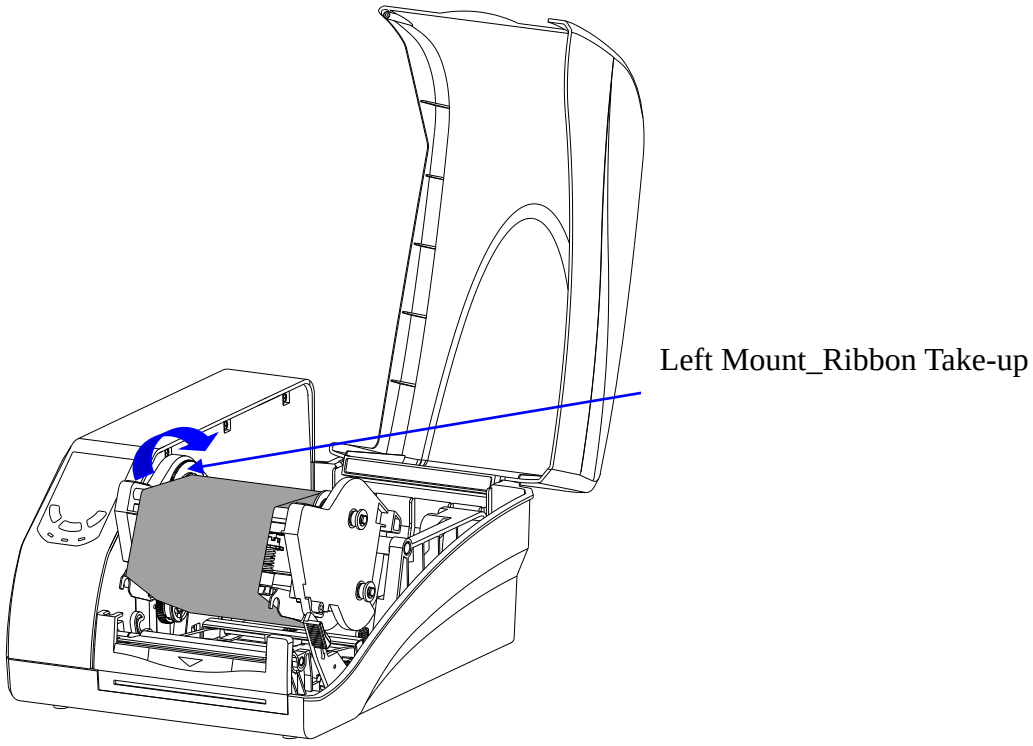

Figure 2-10 Ribbon Roll loaded

NOTE

To make sure the Ribbon End Sensor works properly, please use ribbon rolls that end with reflective materials or transparent materials with good reflective performance.

2.2.4 Loading the Media

The printer can be operated under three different modes: Standard Mode, Tear-off Mode, and Cutter Mode.

- In Standard Mode, the printer stops and goes into standby as soon as the print job is complete.
- In Tear-off Mode, after the print job is finished, the printer will feed the label until the edge of it aligns with the edge of the Tear-off Bar allowing easy tear off for the user.
- In Cutter Mode, the printer stops and cuts the printed label(s) (Only available on models with cutter installed).

2.2.4.1 Tear-off Mode

CAUTION

- *Tear-off Mode is the default operation mode, switching Tear-off Mode off will automatically enable Standard Mode.*
- *The steps of loading the media in Standard Mode are the same as in Tear-off Mode.*

To load media into the printer while under Tear-off Mode, follow the steps below:

1. Load a roll of media (labels facing up) on the Media Spindle, then slide the two Media Roll Guides, with smooth sides facing toward the media, onto the Media Spindle from each end until both Media Roll Guides touch the media. When placing a roll of media with a 3″ ID core, please slide the two Core Adapters onto the Media Spindle first, as shown in Figure 2-11.

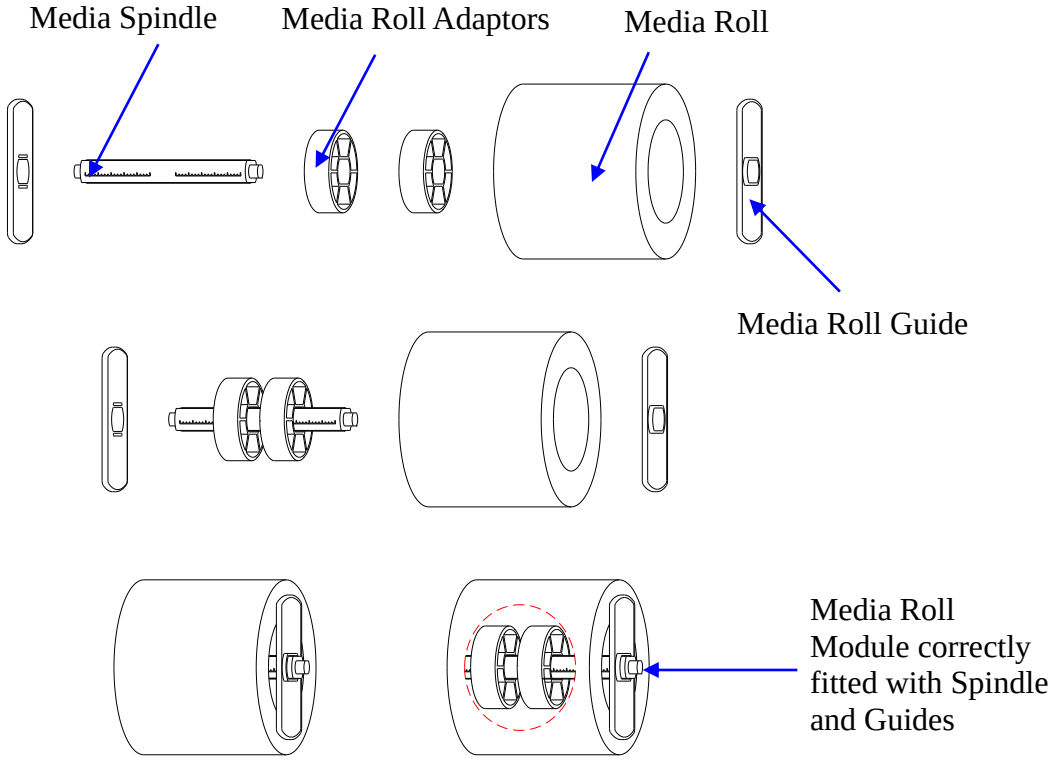

Figure 2-11 Place Media Roll on Media Spindle

2. Place the entire unit into the media compartment in the printer.

3. Position the media roll in the middle of the Spindle, using the ruler on the Media Spindle for alignment.
4. Thread the media under the Media Guide Rod and Transmissive Media Sensor, as shown in Figure 2-12.

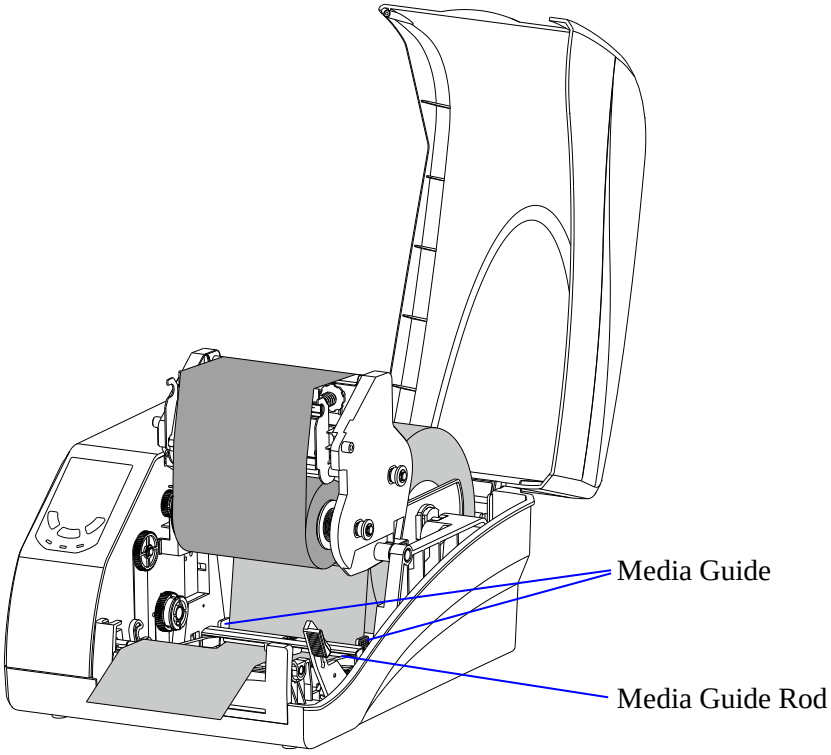

Figure 2-12 Load the Media

5. Slide the Media Guide to the edge of the media, making sure that the media remains flat and is placed in the middle of the Tear-off Bar. This can be checked with the ruler on the Tear-off Bar.
6. Press the Printhead Module downward until you hear a "click", as shown in Figure 2-13.

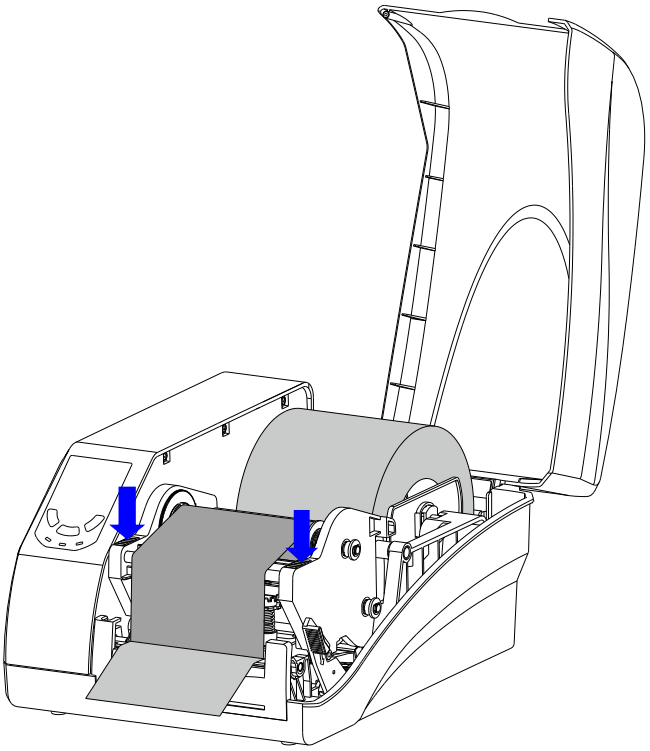

Figure 2-13 Press Down to Lock the Printhead Module

7. Calibrate the media sensor. See 3.2.1 Adjusting the Media Sensor.

2.2.4.2 Cutter Mode (Cutter accessory required)

To load media into the printer while under Cutter Mode, follow the steps below:

1. Set the printer to Cutter Mode.

   Right click at the printer driver icon installed on the PC (refer to 2.3 Installing the Printer Driver), select "Printer Preferences" → "Stock" → "Post-Print Action" → "Cut" to enable the Cutter Mode, as shown in Figure 2-14.

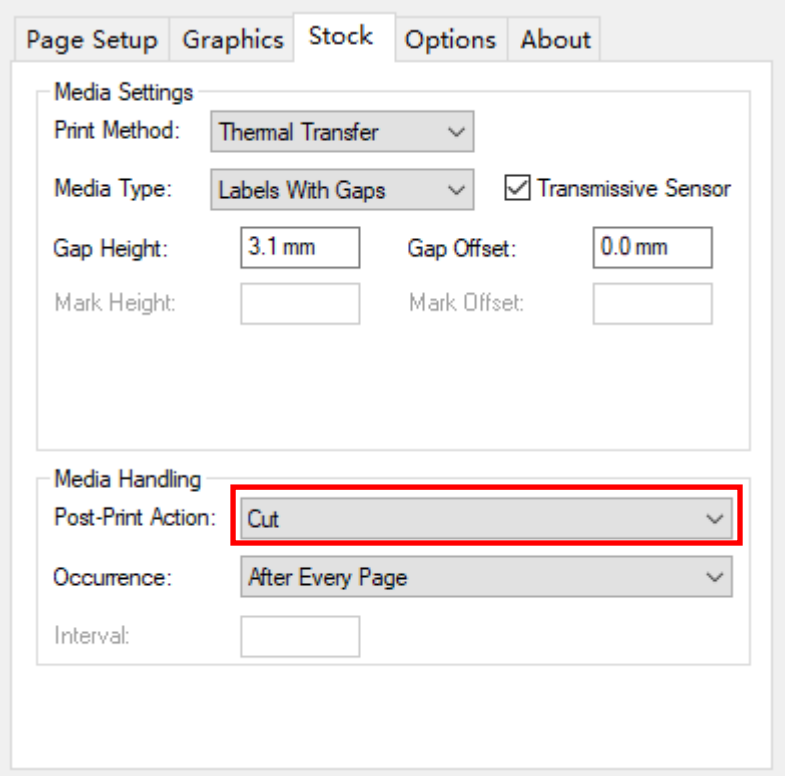

Figure 2-14 Stock Interface

NOTE

For Win 10 operating system, please click at the printer driver icon, choose "Management"→"Printer Preferences"→"Stock"→"Post-Print Action"→"Cut" to enable Cutter Mode.

2. Turn on the printer and wait for the printer to boot normally. Then reset the cutter: press and hold the [CANCEL/▮▸Reset] button for 4 seconds until three indicators start blinking, release the [CANCEL/▮▸Reset] button and press it again to finish the reset.

   NOTE

   Please reset the cutter before installing the media to prevent any issues with installation.

3. Load the media, please refer to 2.2.4.1 Tear-off Mode. Thread the media through the opening on the cutter as shown in Figure 2-15.

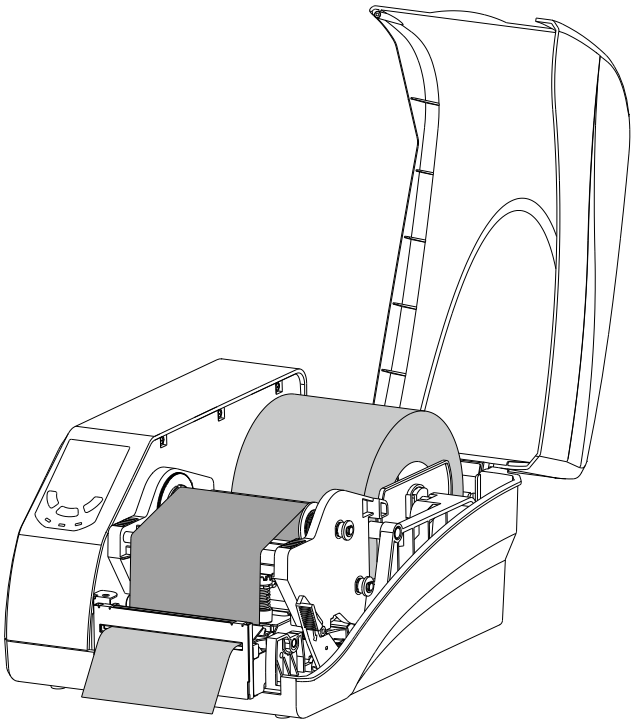

Figure 2-15 Media Loaded

4. Press the Printhead Module downward until you hear a "click".
5. Calibrate the media sensor. See 3.2.1 Adjusting the Media Sensor.

2.3 Installing the Printer Driver

2.3.1 USB Port Installation

CAUTION

If you have installed the POSTEK printer driver on the computer before, when an additional printer is connected to the computer and powered on, the printer driver for the additional printer will be installed automatically.

When installing the POSTEK printer driver for the first time, if you connect the printer to your computer via the USB port, please refer to the steps below to complete the printer driver installation (Windows10 operating system for example).

1. Connect the printer to your computer using a USB cord, then power on the printer.
2. Visit the POSTEK website: http://www.postekchina.com and download the printer driver.
3. Double-click the printer driver icon to bring up the "License Agreement" screen. Select "I accept the Items in the license agreement", then click "Next", as shown in Figure 2-16.

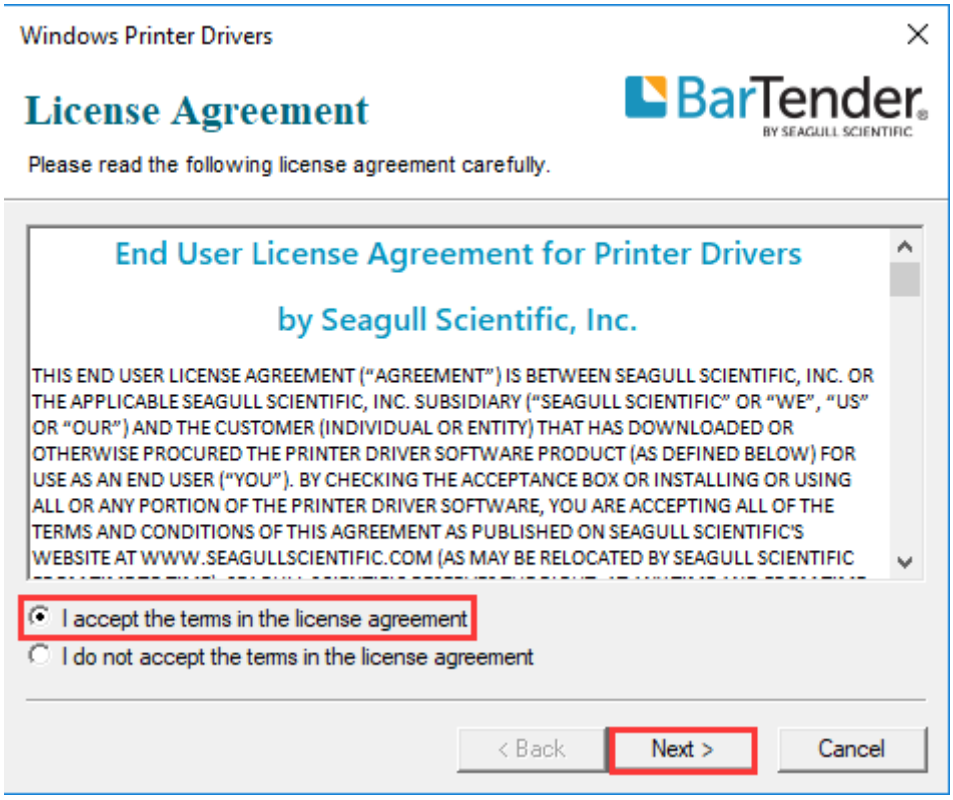

Figure 2-16 License Agreement Screen

4. The "Installation Directory" screen displays. Click "Browse…" and select where the files will be installed, then click "Next", as shown in Figure 2-17.

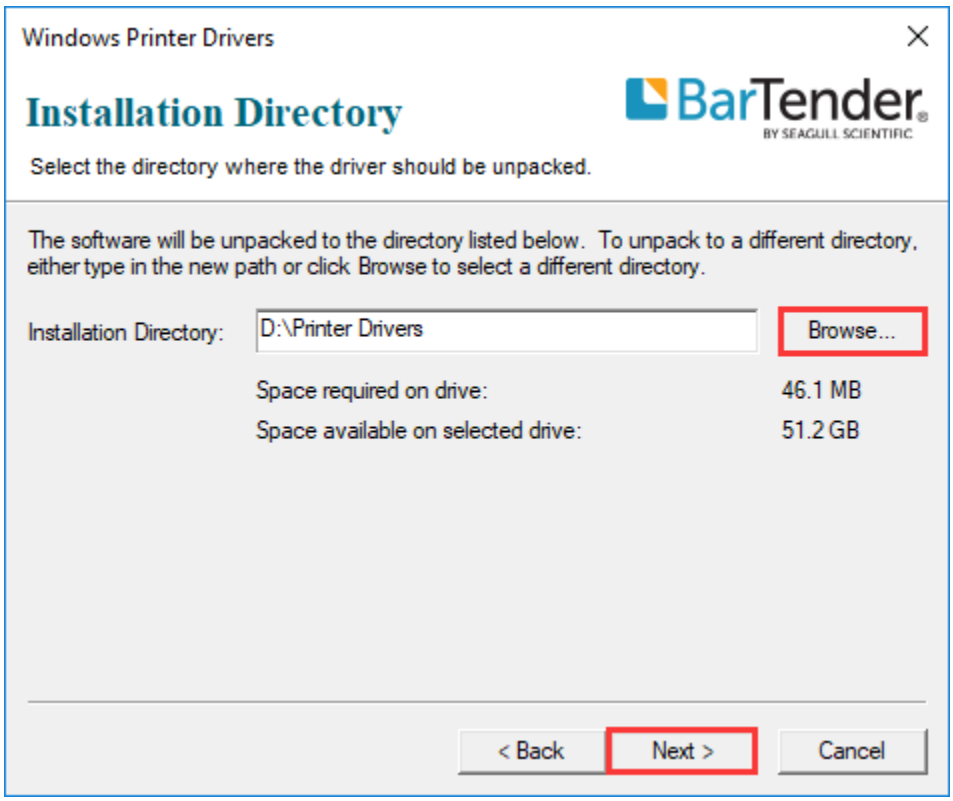

Figure 2-17 Installation Directory Screen

5. On the "Installation Information" screen, check the box that says "Run Driver Wizard after unpacking drivers", then click "Finish", as shown in Figure 2-18.

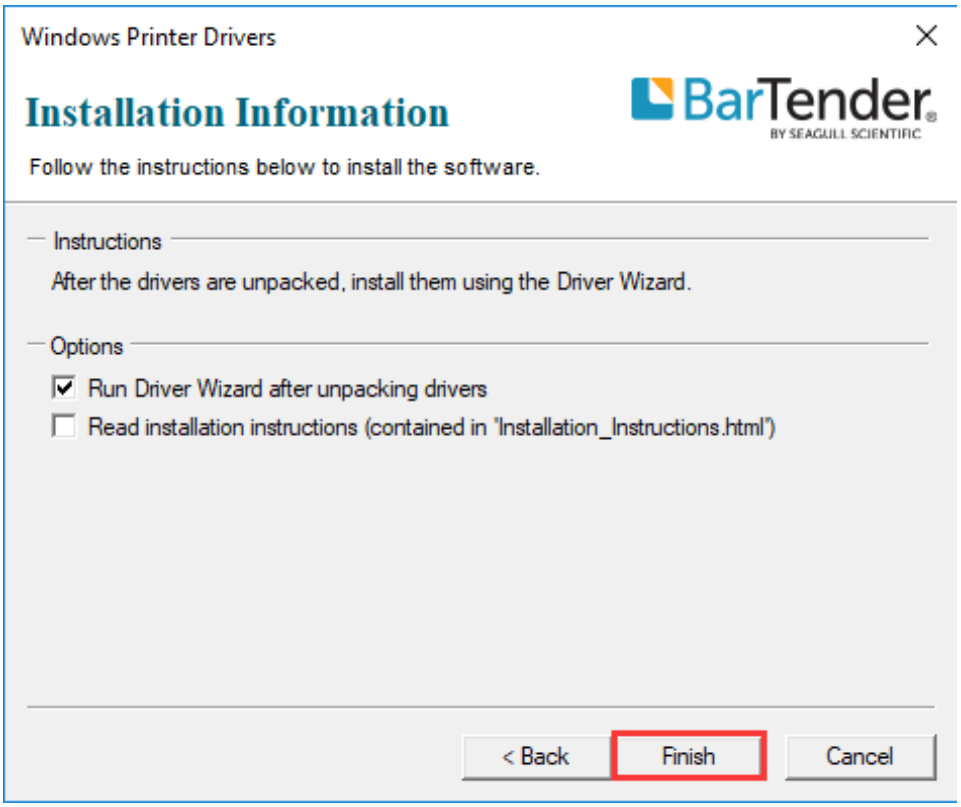

Figure 2-18 Installation Information Screen

6. On the "Seagull Driver Wizard" screen, select "Install printer drivers", and then click "Next", as shown in Figure 2-19.

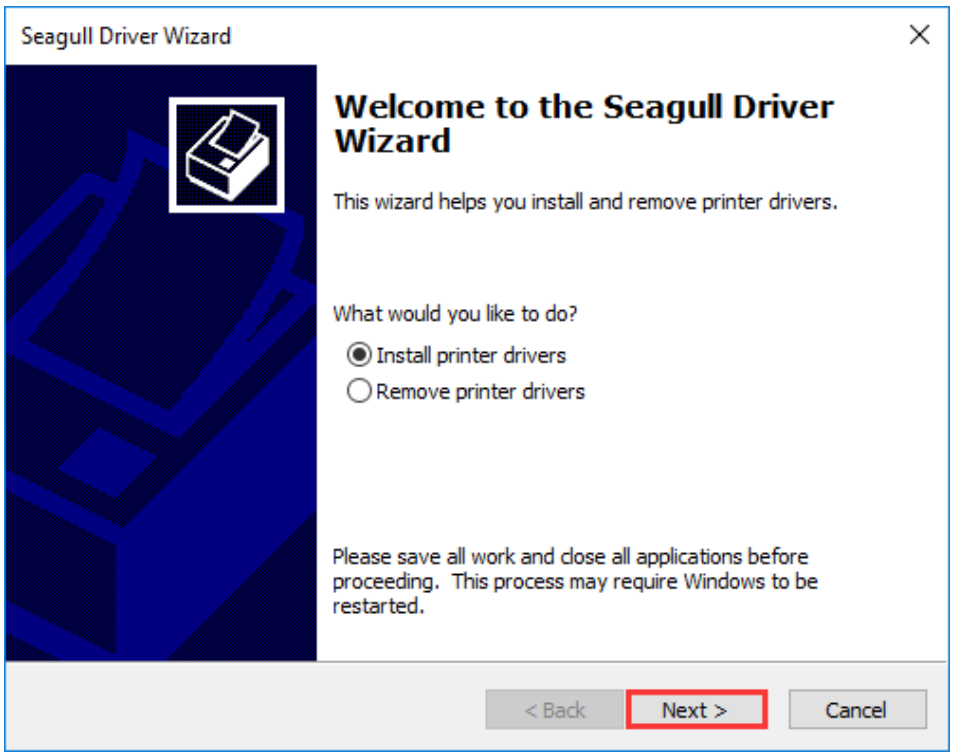

Figure 2-19 Seagull Driver Wizard Screen

7. The connected printer will be detected (POSTEK G-2108 for example), click "Next", as shown in Figure 2-20.

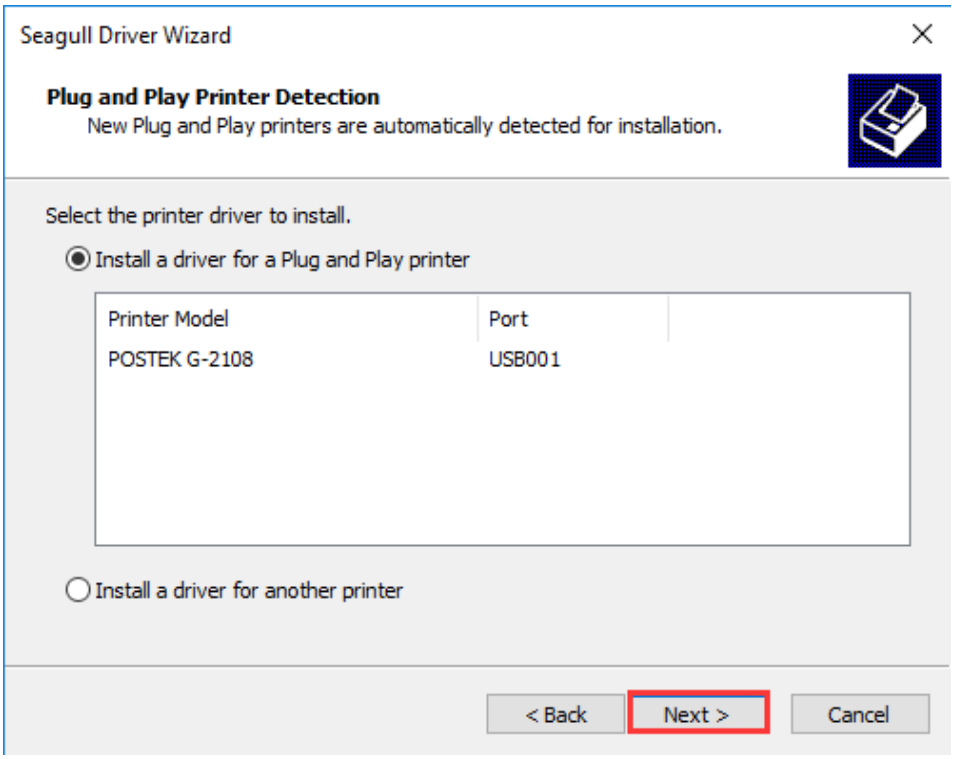

Figure 2-20 Printer Detected

8. On the "Specify Printer Name" screen, enter a name for the printer, as shown in Figure 2-21, then click "Next" to complete the driver installation.

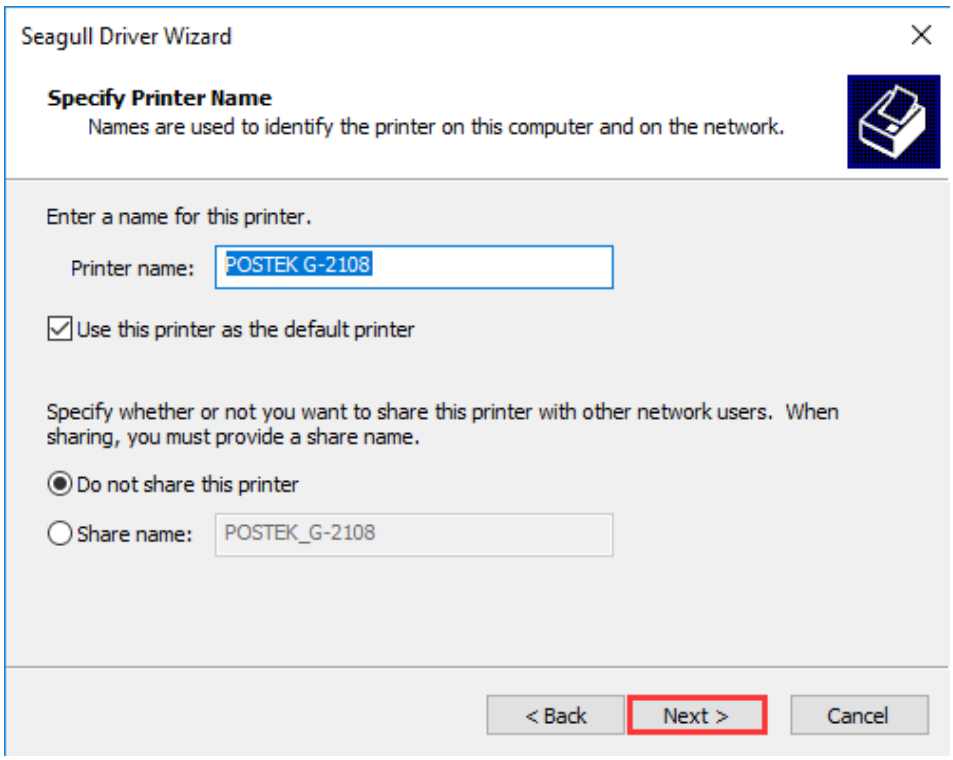

Figure 2-21 Specify Printer Name

9. Print a test page to see whether the printer is connected properly, as shown in Figure 2-22.

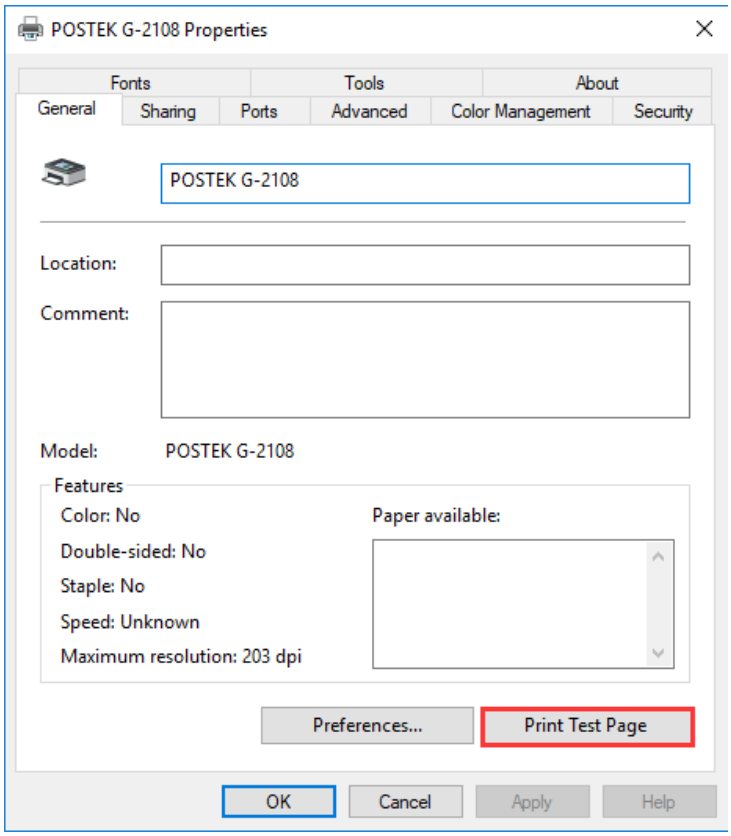

Figure 2-22 Print Test Page

2.3.2 Network Port Installation

If you connect the printer to your computer using an Ethernet cable or through WLAN, you will need to configure the printer's network parameters first, and then install the printer driver and configure the printer port information.

2.3.2.1 Ethernet Configuration

You can configure the printer's network parameters through Utility software. The steps are as follows:

1. Connect the printer to your computer using an Ethernet cable, then power on the printer.
2. Check the LAN information. See Figure 2-23.

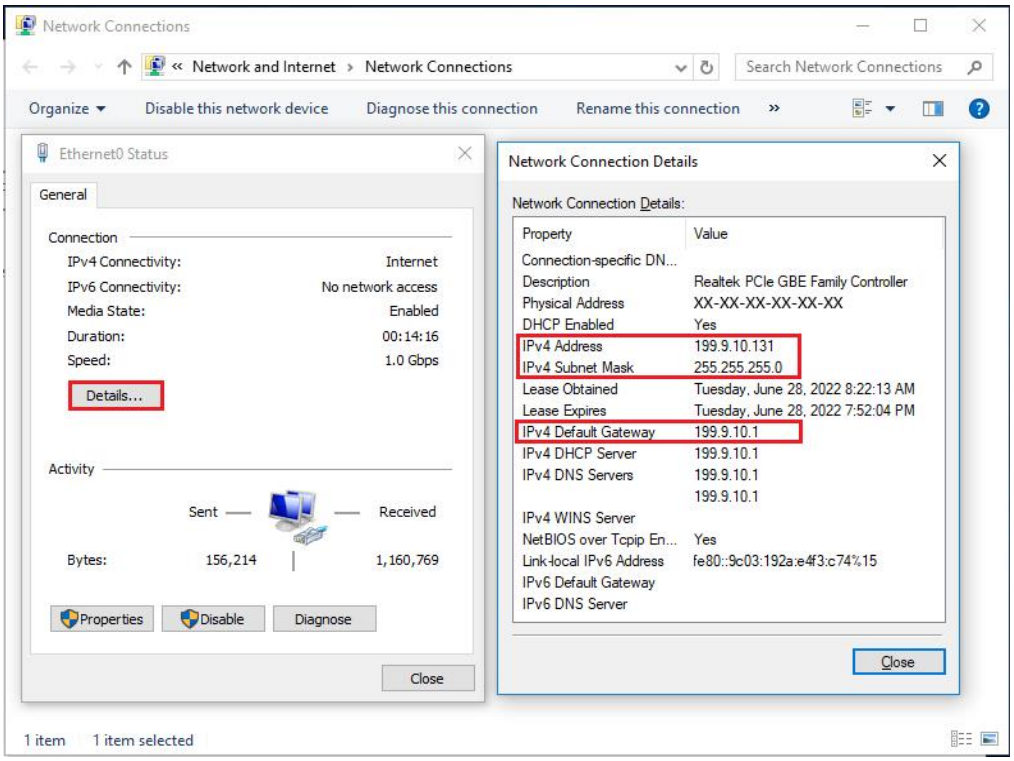

Figure 2-23 Check the LAN information

3. Visit the POSTEK website: http://www.postekchina.com and download the Utility software.
4. Open the Utility software and click "Network", as shown in Figure 2-24.

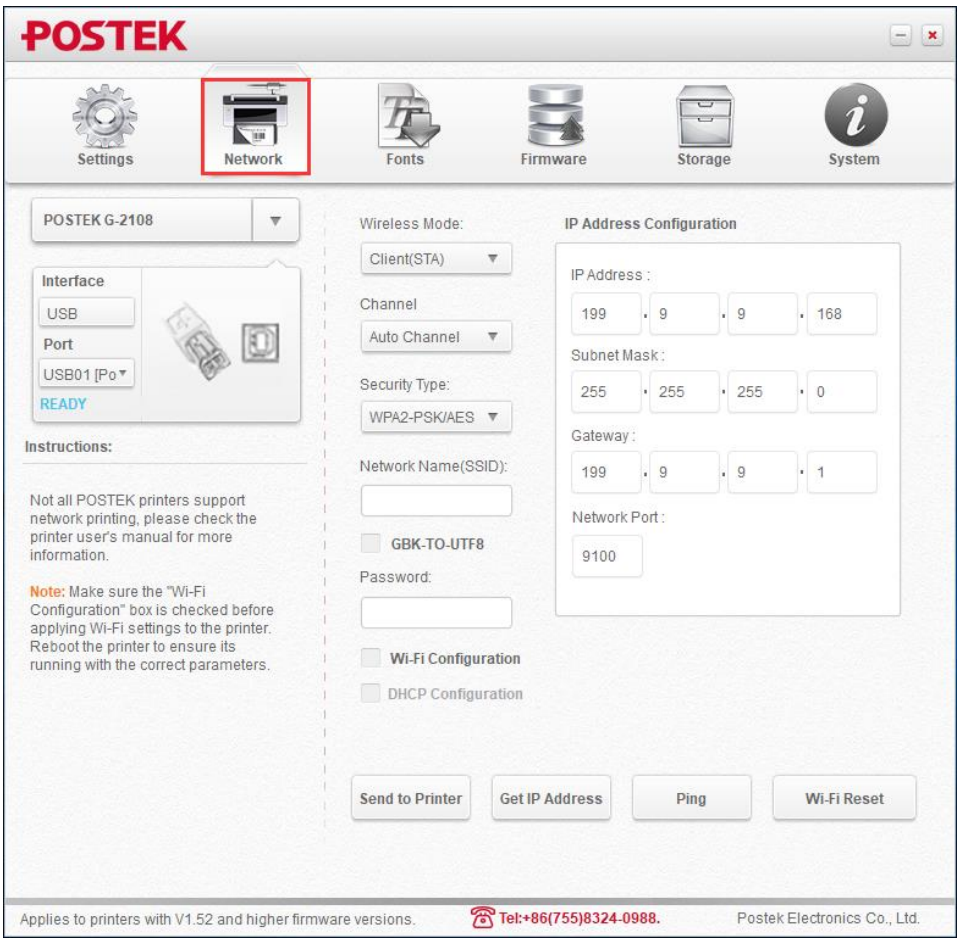

Figure 2-24 Open the Utility

5. Enter the "IP Address", "Subnet Mask", and "Gateway" (Note: the IP address here must be in the same network segment as the LAN, and the last figure of the IP address should be unique in the network group), as shown in Figure 2-25.

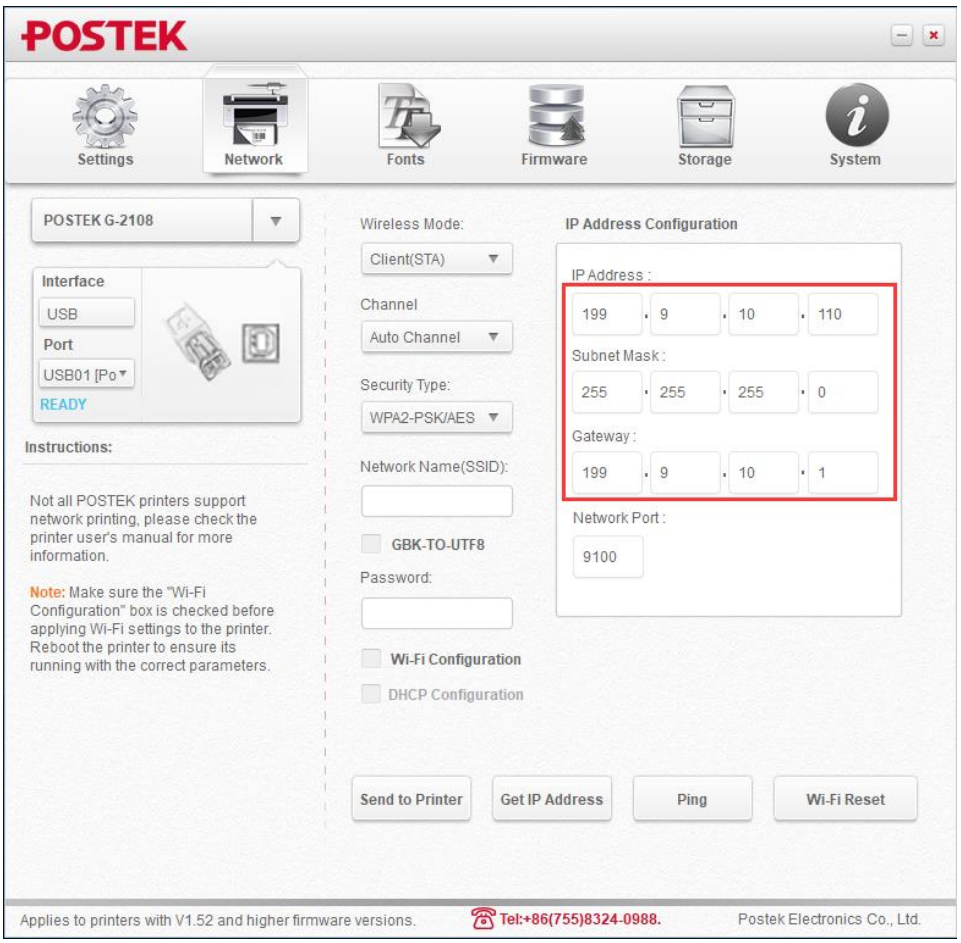

Figure 2-25 Configure the Network Parameters

6. Click "Send to Printer", the [MEDIA] and [RIBBON] indicators will blink simultaneously, when the two indicators are lit and return to a steady state, click "Ping" to check whether the configuration is successful or not, as shown in Figure 2-26.

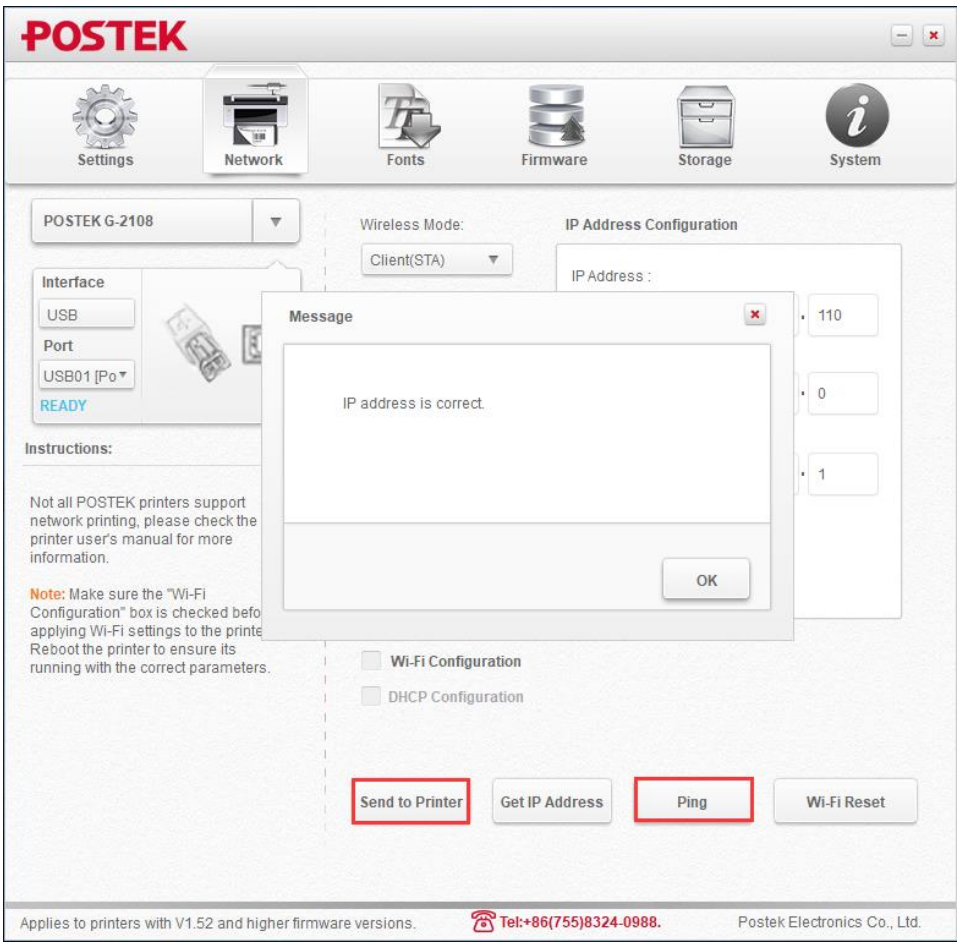

Figure 2-26 Successful Configuration

2.3.2.2 Wireless Network Configuration

You can configure the printer's wireless network parameters through Utility software. The steps are as follows:

1. Connect the printer to your computer using a USB cord, then power on the printer.
2. Visit the POSTEK website: http://www.postekchina.com and download the Utility software.
3. Open the Utility software and click "Network", as shown in Figure 2-27.

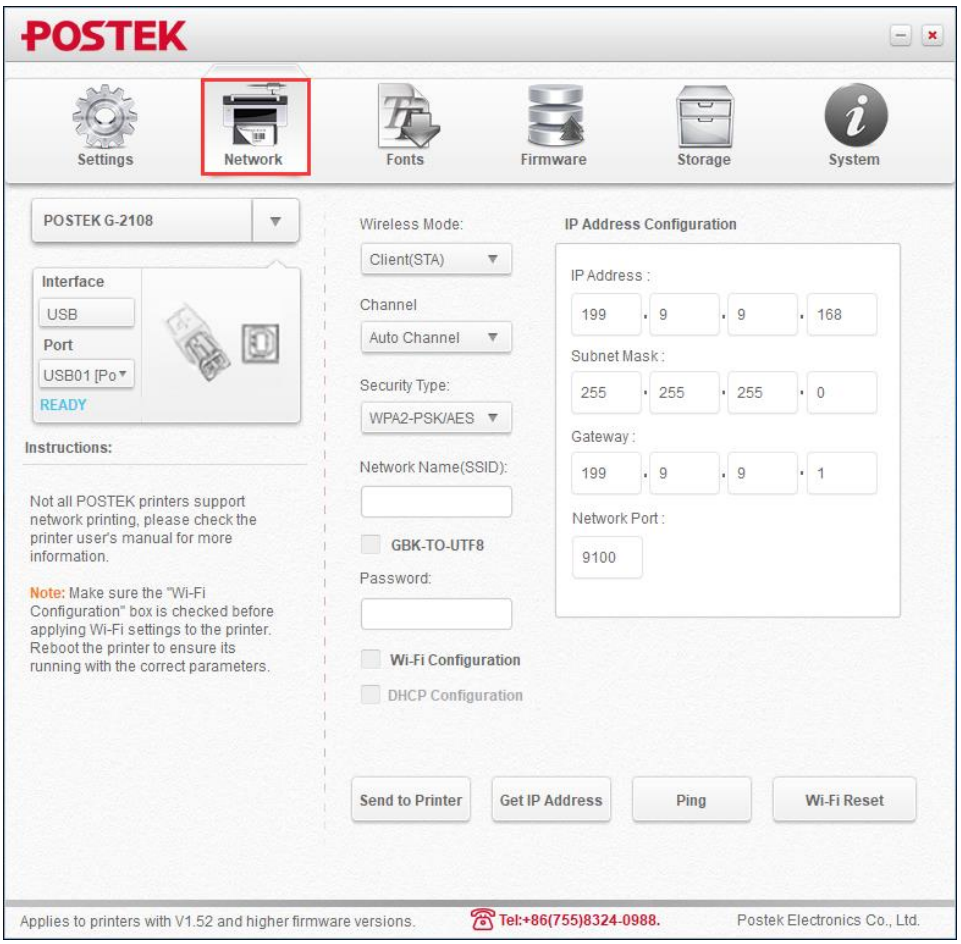

Figure 2-27 Open the Utility

4. Enter the wireless mode, channel, security type, network name (SSID), password and IP address, then click "Wi-Fi Configuration", as shown in Figure 2-28.

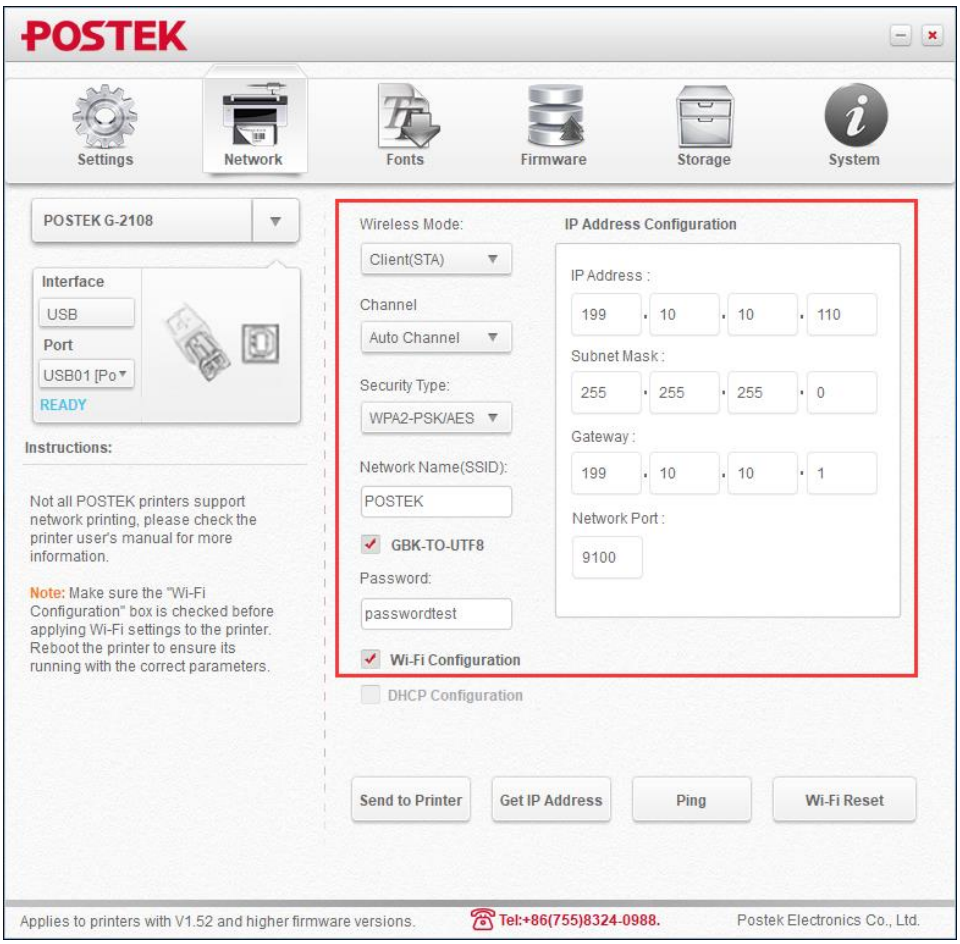

Figure 2-28 Wireless Network Configuration

Table 2-4 Items Description

Items	Description
Wireless Mode	Set the wireless mode. The default value is Server (AP). • Client (STA): The STA mode enable printer to connect to the WLAN created by wireless router via wireless access, which is regarded as a device within the WLAN group and can be accessed by other devices that connected to this WLAN. • Server (AP): The AP mode creates a wireless network that provides wireless access for other mobile devices with Wi-Fi function (such as laptop, taplet PC and smartphone) to connect to the printer directly.
Channel	Not necessary to change.
Security Type	Set the security type. • Client (STA): Needs to be set according to actual WLAN. • Server (AP): Not necessary to change.
Network Name (SSID)	Set the network name. • Client (STA): Needs to be set according to actual WLAN. • Server (AP): Not necessary to change.
GBK-TO-UTF8	Not necessary to change.
Password	Set the password. • Client (STA): Password for WLAN. • Server (AP): Password for other mobile devices to connect to the printer.
IP Address Configuration	Set the IP Address of the printer.

Items	Description
	• Client (STA): Set it on the same network segment as the WLAN. The last figure of the IP address should be unique in the network group. • Server (AP): Not necessary to change.
Wi-Fi Configuration	Check it before "Send to Printer".
DHCP Configuration	It is available when the box of "Wi-Fi Configuration" is checked. The IP address, subnet mask and gateway are not available for configuration once DHCP is enabled.

5. Click "Send to Printer", the printer will restart after a few seconds. You can check whether the configuration is successful or not through printing the configuration information.

   NOTE

   If WiFi configuration is not successful, please check and confirm that the network name, password, subnet mask and gateway are correct, and that the IP address is not occupied.

2.3.2.3 Driver Installation and Port Configuration

After configuring the printer's network parameters, please refer to the following steps to complete the driver installation and port configuration.

1. Visit the POSTEK website: http://www.postekchina.com and download the printer driver.
2. Double-click the printer driver icon, follow the prompted screen to extract the driver installer and run the driver installation wizard (for details, please refer to Steps 3~6 in 2.3.1 USB Port Installation).
3. On the "Connect Printer" screen, select "Network (Ethernet or WiFi)", and then click "Next", as shown in Figure 2-29.

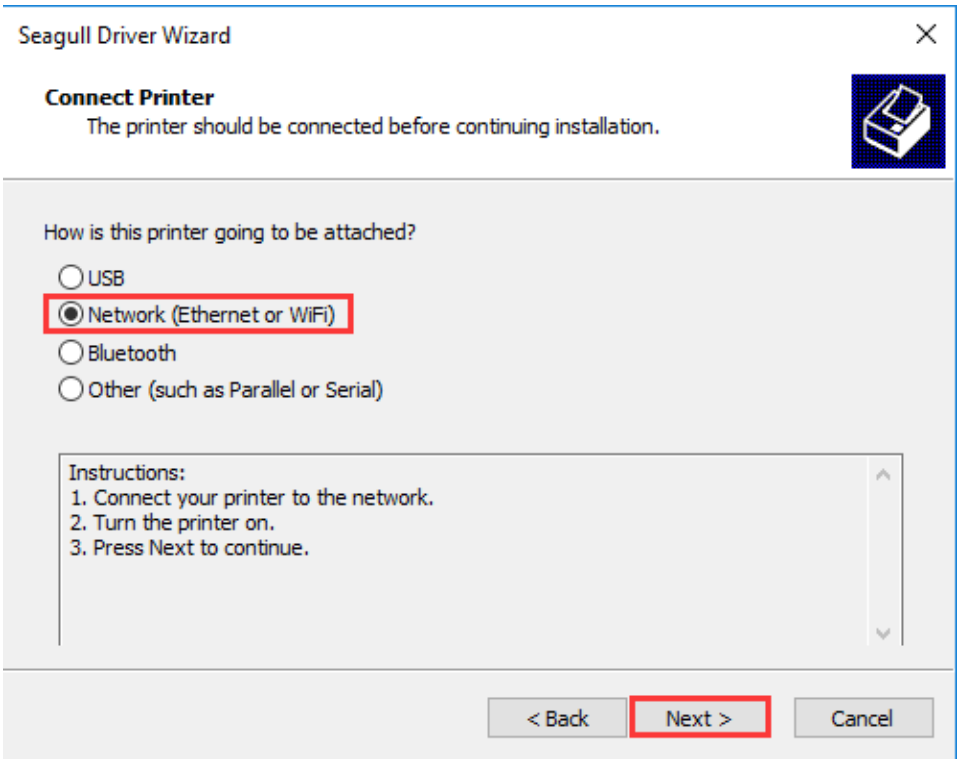

Figure 2-29 Connect Printer Screen

4. The "Specify Printer Model" screen displays, select the printer model (POSTEK G-2108 for example), and click "Next", as shown in Figure 2-30.

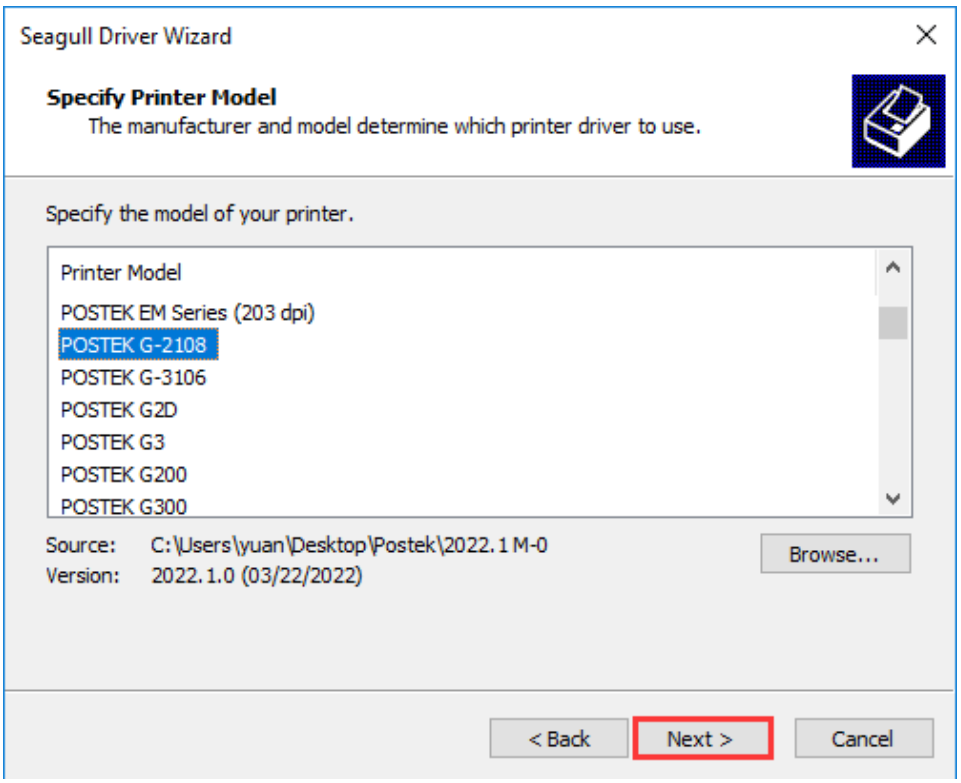

Figure 2-30 Specify Printer Model Screen

5. On the "Specify Port" screen, click "Create Port…" to bring up "Create Port" dialog box, select "Standard TCP/IP Port" - "New Port…", as shown in Figure 2-31.

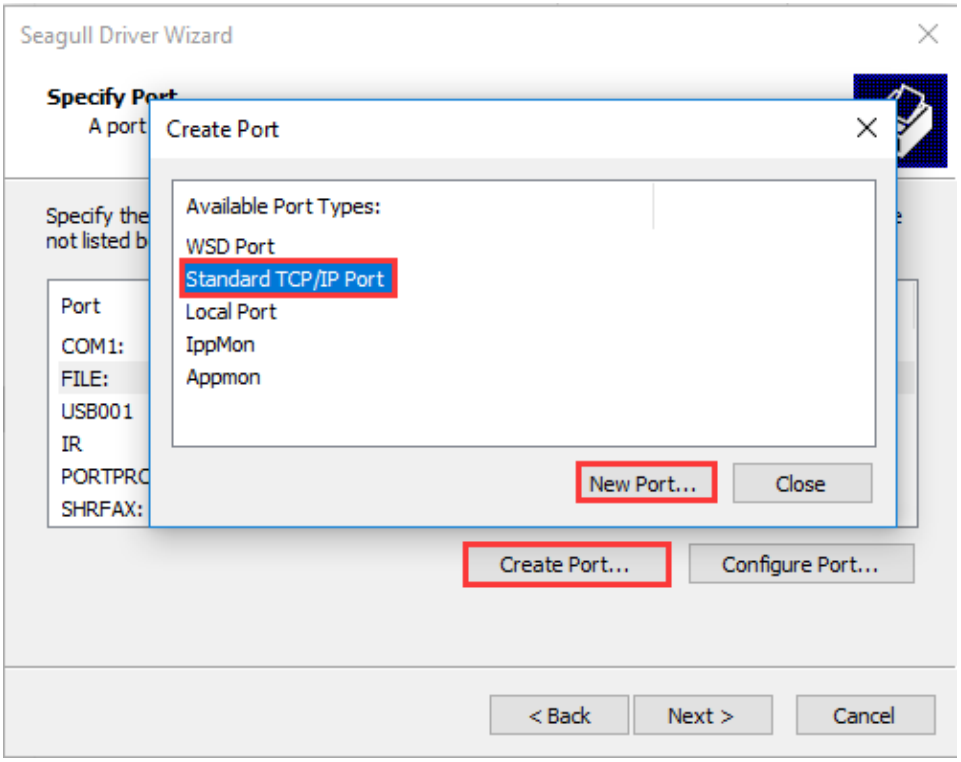

Figure 2-31 Create Port

6. The "Add Standard TCP/IP Printer Port Wizard" screen displays, click "Next", as shown in Figure 2-32.

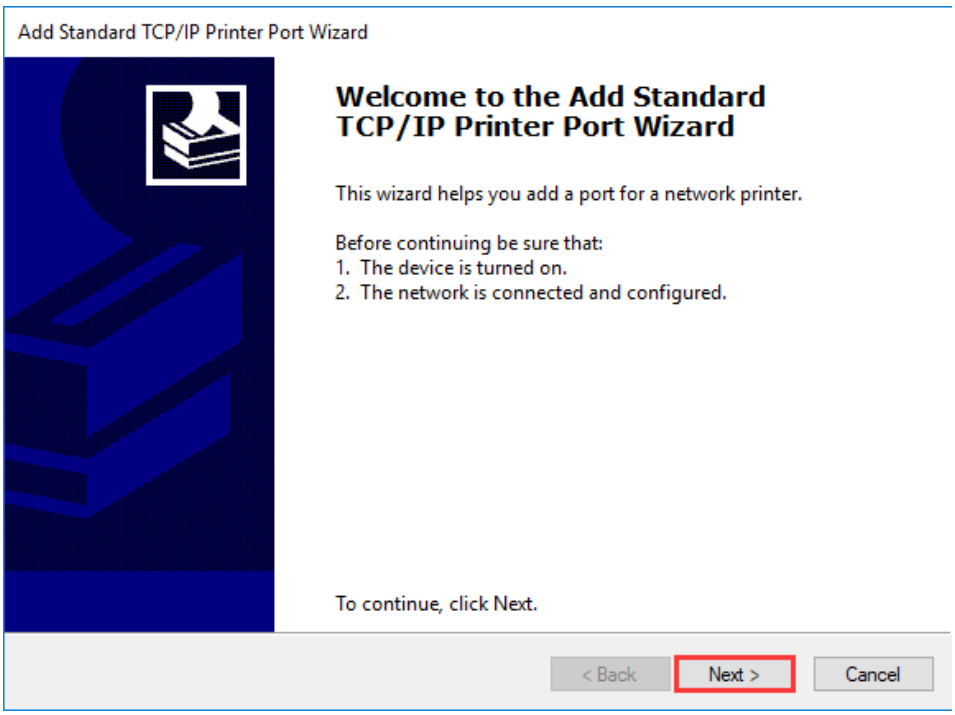

Figure 2-32 Add Standard TCP/IP Printer Port Wizard

7. On the "Add Port" screen, enter the IP Address of the printer (Note: the IP address here must be consistent with the IP address of the printer that has been set, and the port name will be generated automatically), and then click "Next", as shown in Figure 2-33.

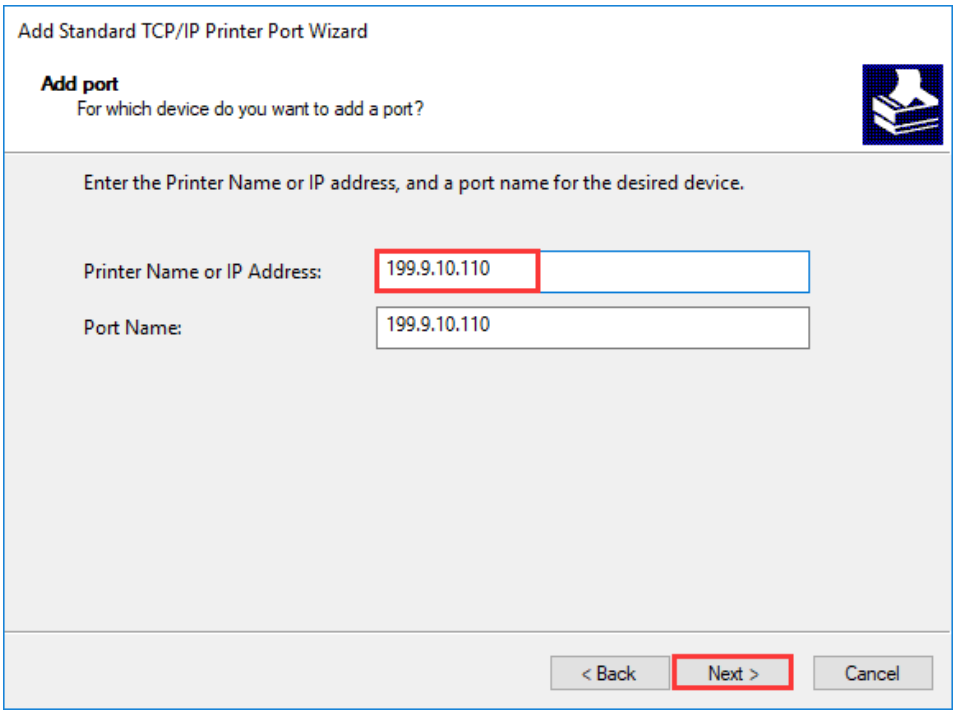

Figure 2-33 Add Port Screen

8. Windows will automatically detect the TCP/IP port. Click "Finish" to complete adding Standard TCP/IP Printer Port, as shown in Figure 2-34.

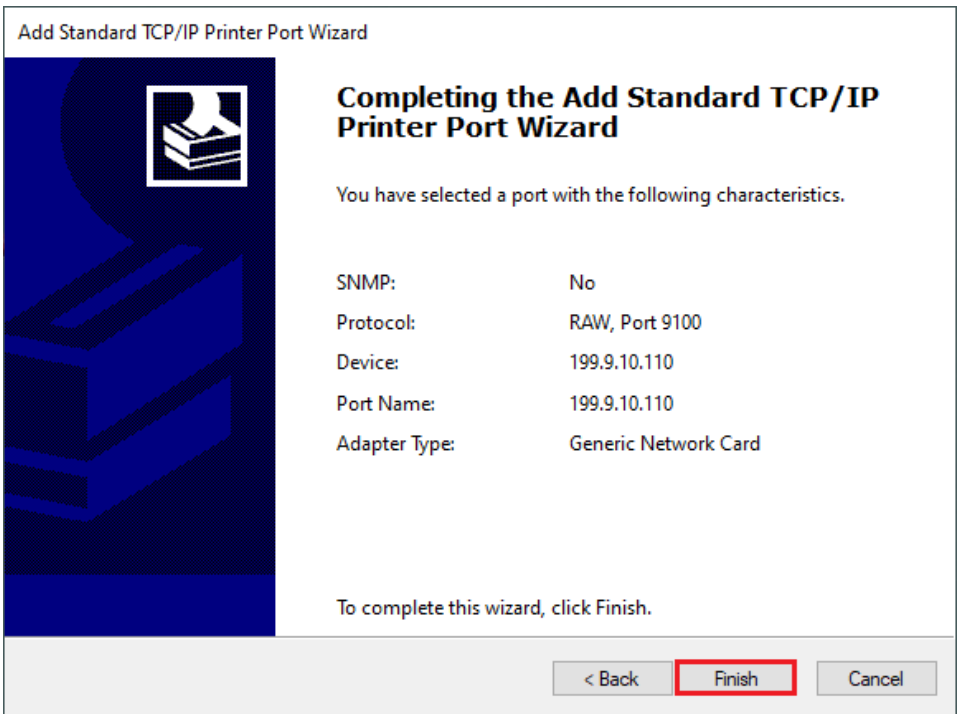

Figure 2-34 Complete adding Standard TCP/IP Printer Port

9. Return to the "Specify Port" screen, select the TCP/IP Port that has been added, and click "Next", as shown in Figure 2-35.

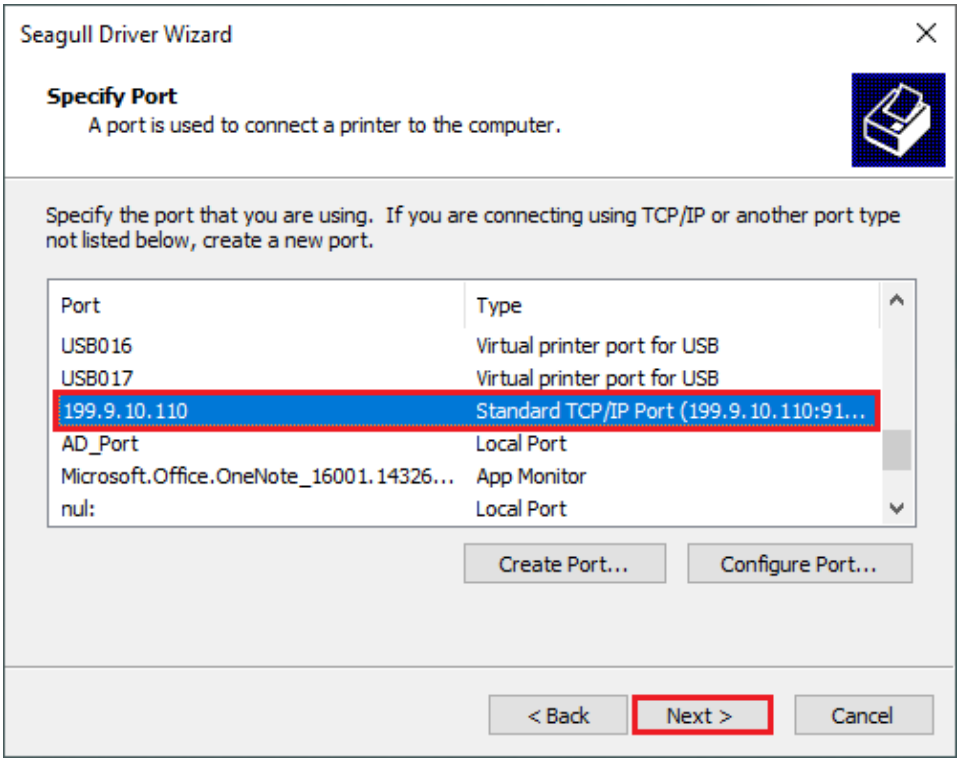

Figure 2-35 Specify Port Screen

10. On the "Specify Printer Name" screen, enter a name for the printer, as shown in Figure 2-36. Click "Next" to complete the driver installation.

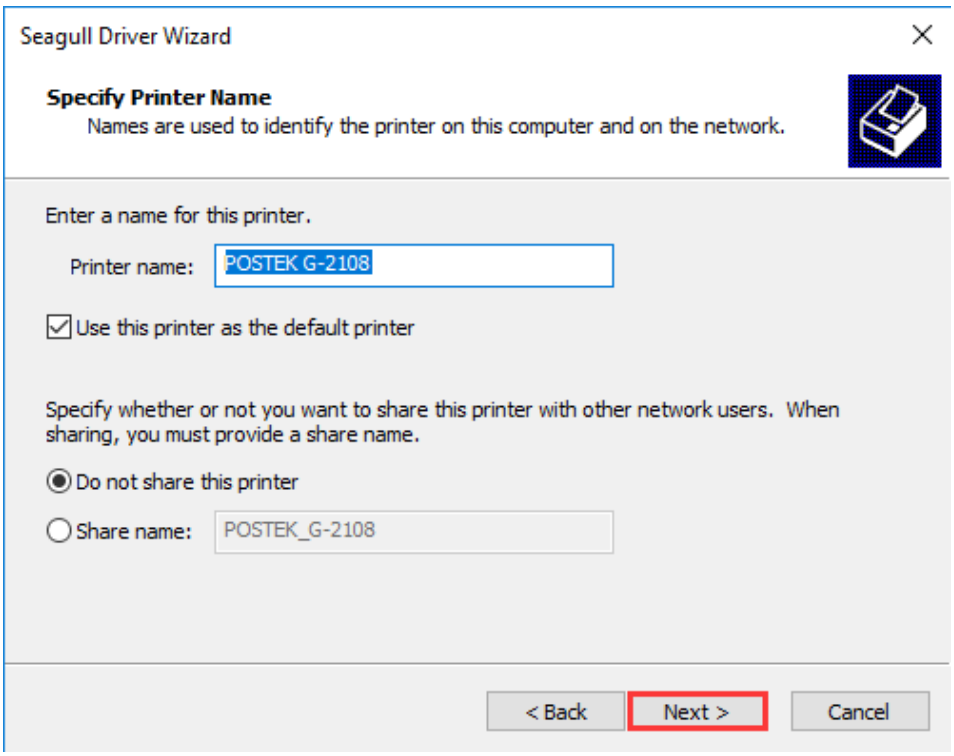

Figure 2-36 Specify Printer Name

11. Print a test page to see whether the printer is connected properly. As shown in Figure 2-37.

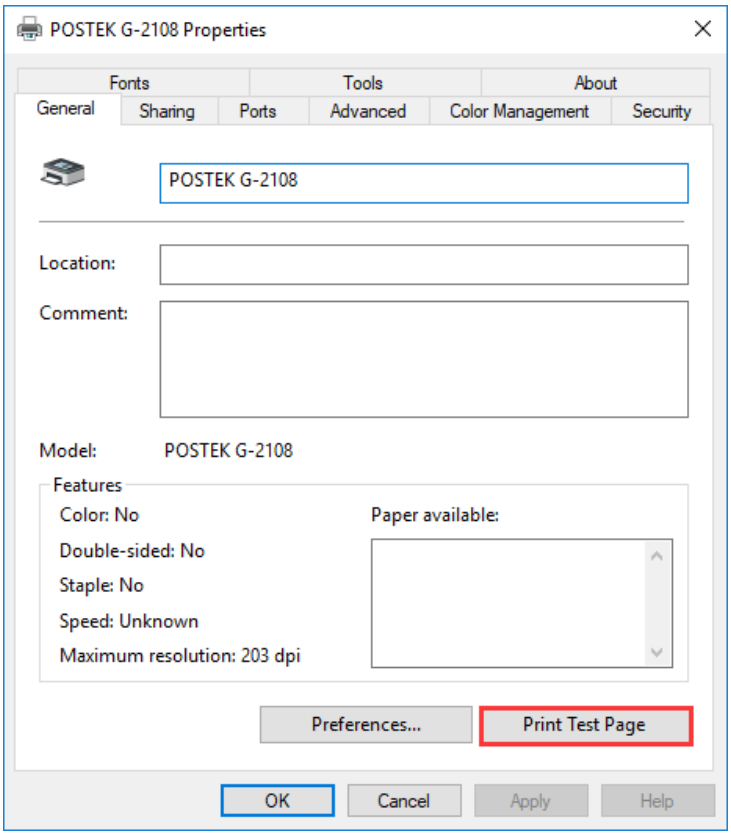

Figure 2-37 Print Test Page

2.4 Installing Label Editing Software

Each printer also comes with a BarTender UltraLite edition software. To access to the software and the directions for use, please scan the QR code on the Quick Start Guide or visit POSTEK website: http://www.postekchina.com.

Chapter 3: Operations and Settings

3.1 Basic Operations

3.1.1 Power Switch

The power switch is on the rear left side of the printer. The symbols on the switch are defined as follows:

— — ON

○ — OFF

3.1.2 The Front Panel

The Front Panel of the printer consists of:

- Three LED Indicators: [MEDIA], [READY] and [RIBBON]
- Three multi-function buttons: [PAUSE/Self Test], [FEED/Calibration] and [CANCEL/▮▸Reset]

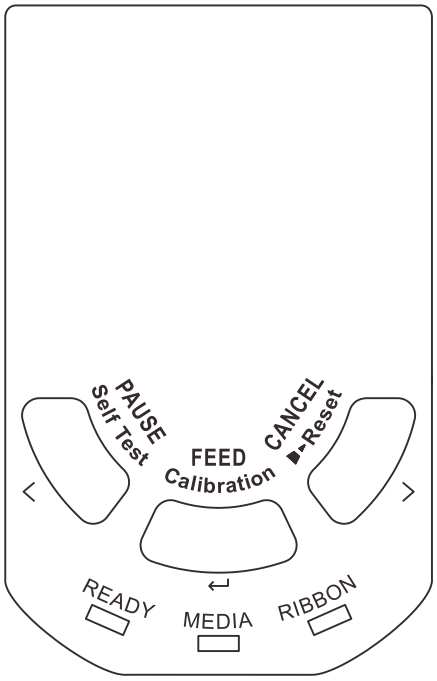

Figure 3-1 Front Panel

3.1.2.1 LED Indicator

The LED indicator on the front of the printer shows the different states that the printer is in, please refer to Table 3-1 below for details.

Table 3-1 LED Indicator Description

LED Indicator	Description
[READY]	• If the indicator is on, the printer is ready and waiting for user input • If only the [READY] indicator is blinking, then the printer is paused and awaiting further instruction

LED Indicator	Description
[MEDIA]	• If the indicator is on, it means the printer is at a normal working state • If both the [READY] and [MEDIA] indicators are blinking, then the printer detected media out
[RIBBON]	• If the indicator is on, it means the printer is using thermal transfer mode (Requires ribbon) • If the indicator is off, it means the printer is using direct thermal mode (No ribbon required) • If both [READY] and [RIBBON] indicators are blinking, then the printer detected ribbon out

3.1.2.2 Panel Buttons

The three buttons on the front of the printer, please refer to Table 3-2 below for details regarding their functionality.

Table 3-2 Panel Button Description

Button	Basic Functions	Advanced Functions (Press and hold for 4 seconds)
[FEED/Calibration]	When printer is in a standby state, press once and the printer will feed one label	Media Sensor Calibration
[PAUSE/Self Test]	• When printer is in working or standby state, press once to pause the printer • When printer is in a paused state, press once to resume	Self-test: The Printer performs a self-test and prints out a configuration report
[CANCEL/■▸Reset]	When printer is in an error state, press once to clear the error report	Reset: Resets the printer to Factory Default Settings

3.1.3 Advanced Functions

3.1.3.1 Media Sensor Calibration

When the printer is on standby, press and hold the [FEED/Calibration] button (hold for around 4 seconds), the printer will automatically feed labels and the media sensor calibration is done. During this process, all three indicators will start blinking. When all three indicators stop blinking and return to a steady state, the media sensor calibration is complete.

NOTE

- *When it is the first time installing the media or when changing to a different type of media, media sensor calibration must be performed.*
- *No calibration is needed when using continuous media.*

3.1.3.2 Obtaining Printer Configuration Information

When the printer is on standby, press and hold the [PAUSE/Self Test] button (hold for around 4 seconds), all three indicators will blink once and then return to a steady state, the printer will print a self-test page with detailed information regarding the printer's configuration then return to standby.

The information includes: the printer model, firmware version, hardware parameters and current status, thermal transfer/direct thermal mode, font list, etc.

3.1.3.3 Reset to Factory Setting

When the printer is on standby, press and hold the [CANCEL/▮▸Reset] button (hold for around 4 seconds), all three indicators will start blinking (if no further input is detected for the next 8 seconds then the printer will return to standby). Release the [CANCEL/▮▸Reset] button and press it again to initiate the reset process, the [READY] indicator will be off and the rest two indicators will blink simultaneously, when all three indicators are lit and return to a steady state, the reset process is complete.

NOTE

The number of printed labels (pcs) and printed length (m) cannot be restored to factory default value.

3.2 Mechanical Adjustments

3.2.1 Adjusting the Media Sensor

CAUTION

- *When it is the first time installing the media or when changing to a different type of media, media sensor calibration must be performed.*
- *No calibration is needed when using continuous media.*

1. Lift the right cover.
2. Push down the Printhead Release Lever to release the Printhead Module.
3. Adjust the position of the Media Sensor.

   To adjust the position of the Reflective Sensor: Lift the Printhead Module to expose the Media Sensor cover, remove the Media Sensor cover and slide the Media Sensor to the appropriate position, then replace the media sensor cover.

   To adjust the position of the Transmissive Sensor: Flip the Toggle Switch to choose center or right position according to the media type, see Figure 3-2.

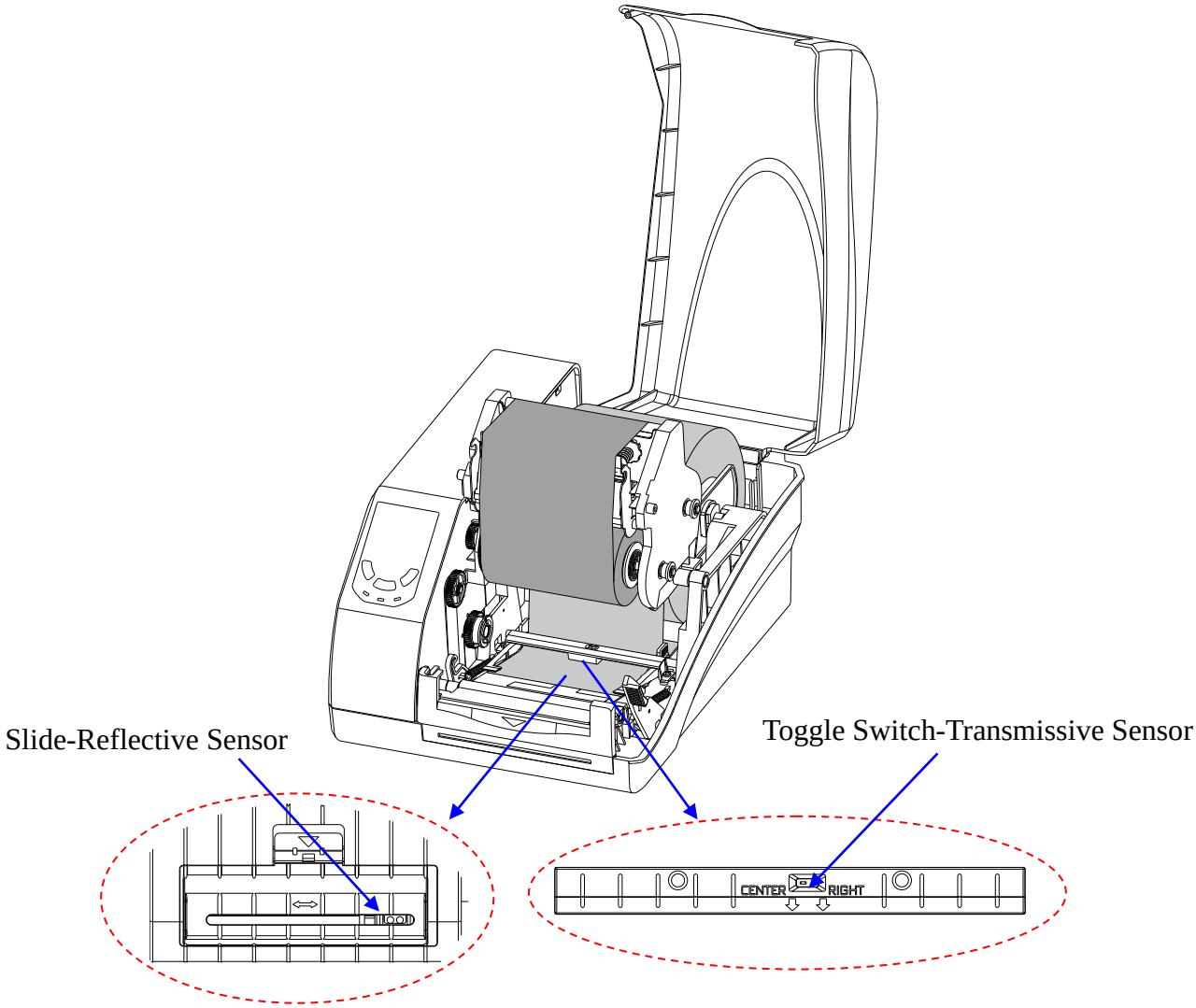

Figure 3-2 Adjust the Media Sensor Position

NOTE

- *Black ribbon is required when use Reflective Sensor, or the Media Out signal may not be detected.*
- *Technically, the Transmissive Sensor is designed to detect a gap, hole or notch between labels, the Reflective Sensor is for detecting black marks. However, in many cases, the Reflective Sensor also can be used to detect gap, hole or notch. When choose Reflective Sensor to detect gap between labels, please refer to Figure 3-3(a) (b) (c) to adjust the position of the sensor for different media types as shown, the sensor shall be placed between the dotted lines.*

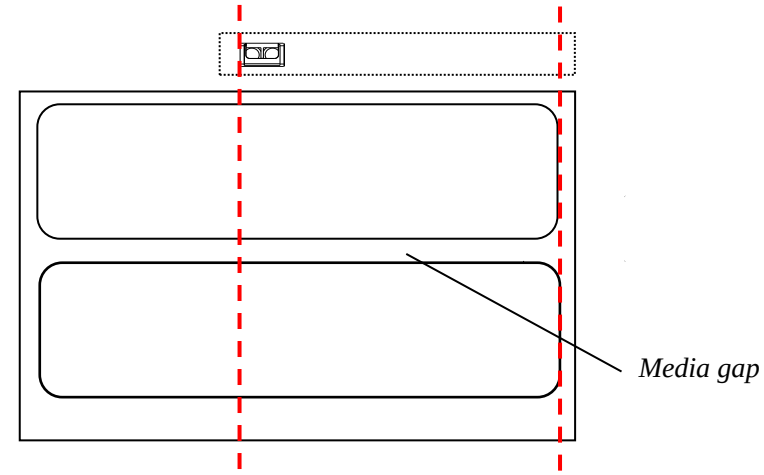

(a)

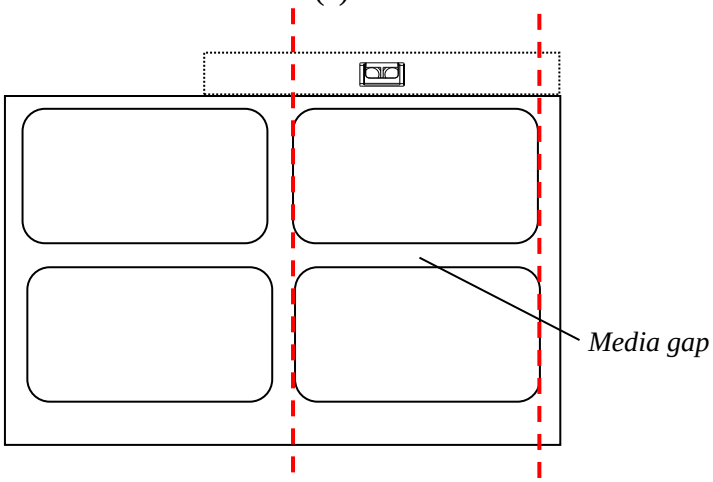

(b)

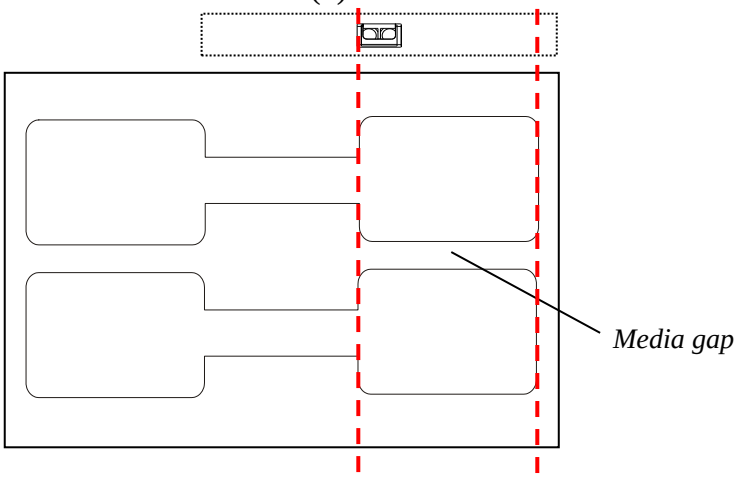

(c)

Figure 3-3 Media Sensor Position

- *When roll media is produced, the media end would be fixed on the media core with duct tape or scotch tape. If your printer cannot detect the Media Out signal well, please refer to Figure 3-4 to check the position of the tape.*

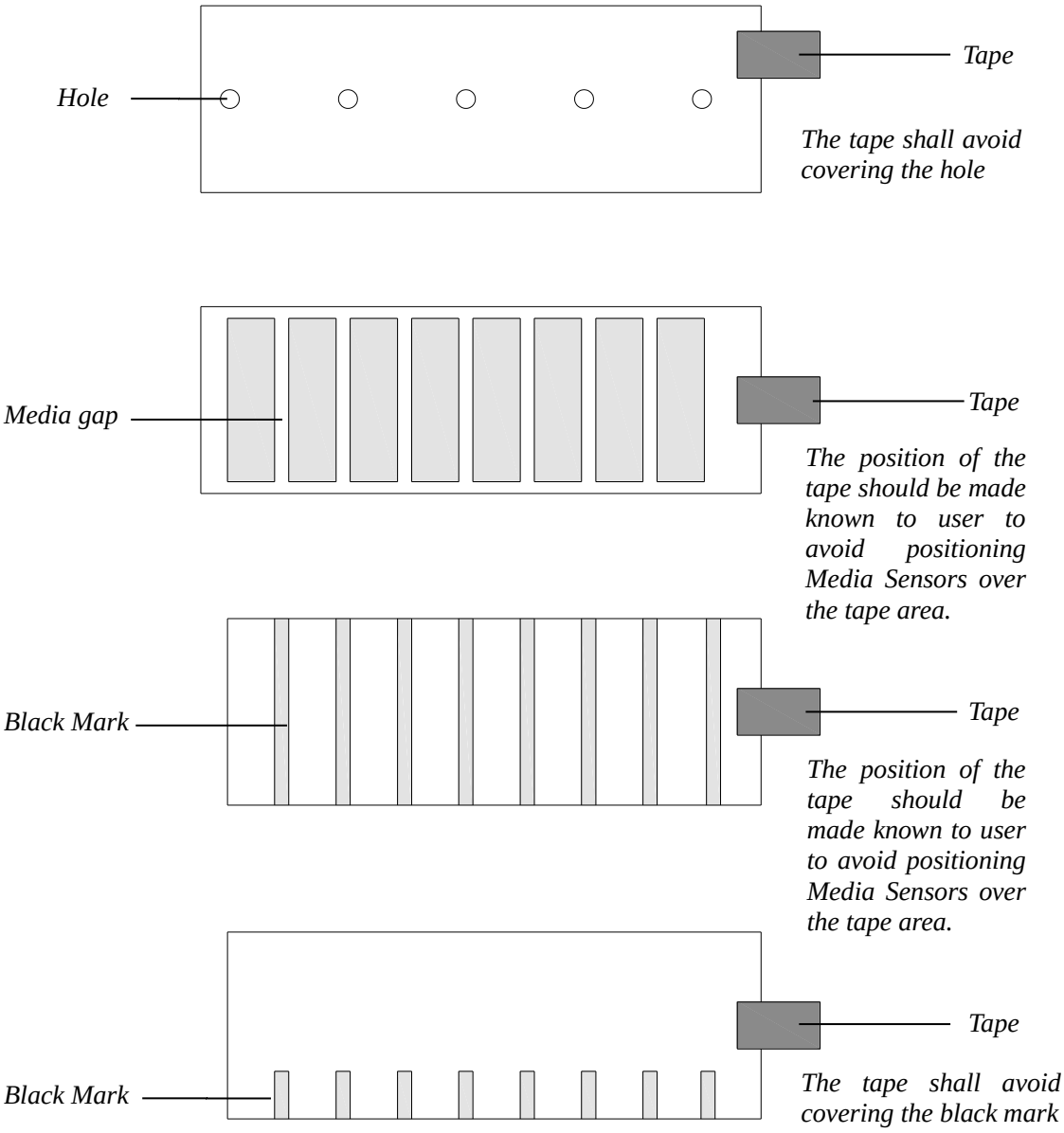

Figure 3-4 End-fixing Tape Position

4. Press and hold the [FEED/Calibration] button (hold for around 4 seconds), the printer will automatically feed labels and the media sensor calibration is done.

3.2.2 Changing the Mode of Media Sensor

The printer have two modes of media sensor: Reflective Sensor and Transmissive Sensor. You can select the appropriate mode of media sensor to adapt different media type and reduce error of label skipping or offsetting. The default mode of media sensor is Transmissive, but you can change the mode by following these steps:

1. Install the Utility 3.0 software on your PC, the Utility 3.0 can be found on the disk that comes with the printer or you can download from our official website http://www.postekchina.com.

   NOTE

   The Utility 3.0 can only communicate and configure printer via USB port, so please use the USB cable to connect the printer and your PC.
2. Click to open Utility 3.0, the interface of the tool will be shown in Figure 3-5; then check if the connection is correct.
3. If the connection is correct, please find the "Sensor Type" under the printer settings area, and then select "Reflective" from the drop-list, see Figure 3-5.

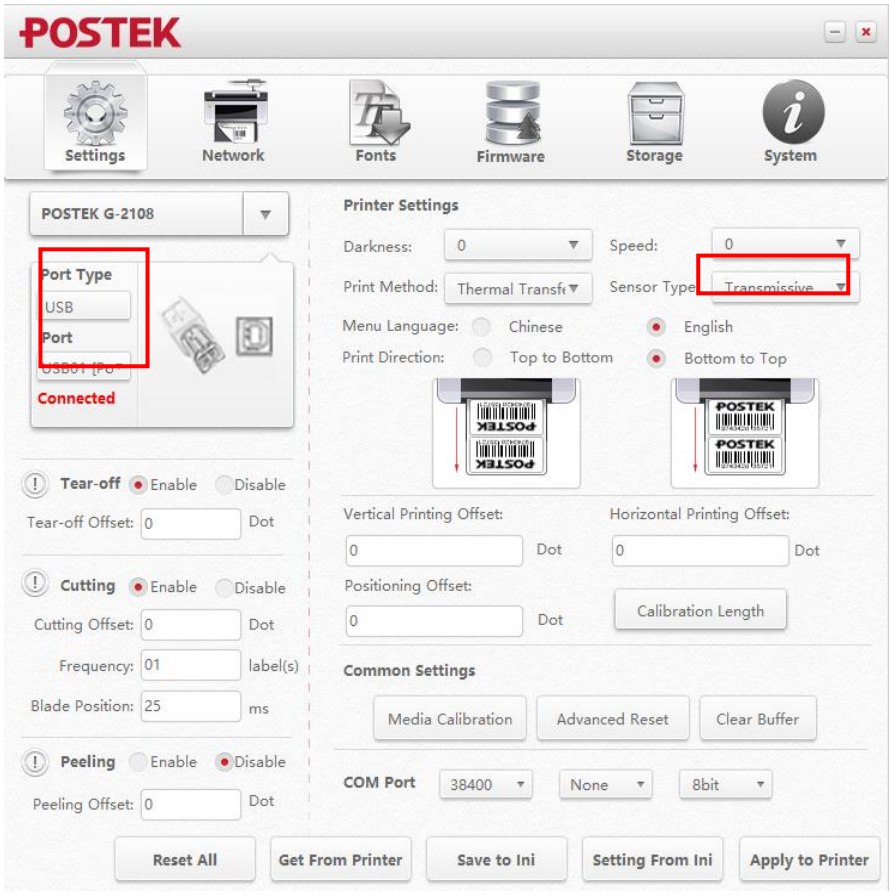

Figure 3-5 Utility Settings Interface

4. Click "Apply to Printer" button to apply the setting to printer.
5. Perform a Media Sensor Calibration that follows steps from the previous section.
6. Open the "Advanced setup" from the printer's driver on your PC, select "Stock" tag, and then select the correct media type from the drop-list and uncheck the box of "Transmissive Sensor", see Figure 3-6.

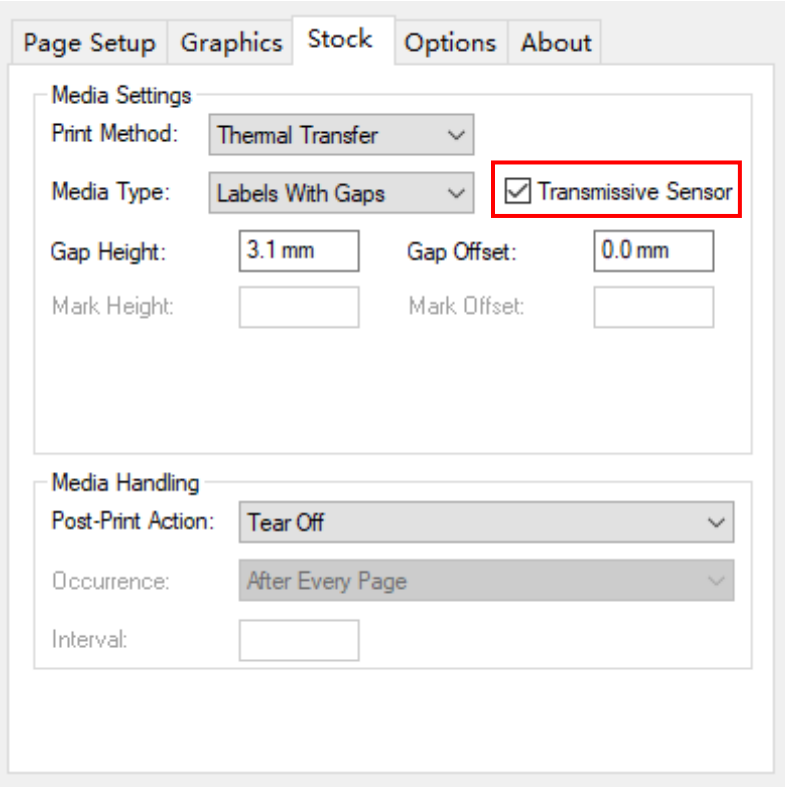

Figure 3-6 Stock Interface

7. Click "Apply" to complete the setup; now your printer is using the Reflective sensor for detecting media.

3.2.3 Adjusting the Printhead Pressure

CAUTION

A qualified technician is required to adjust the printhead pressure. Printhead damage or poor printout quality may occur if the procedure is not done correctly.

The printhead pressure module contains two spring assemblies, respectively controlling the pressure of the printhead on both sides, as shown in Figure 3-7.

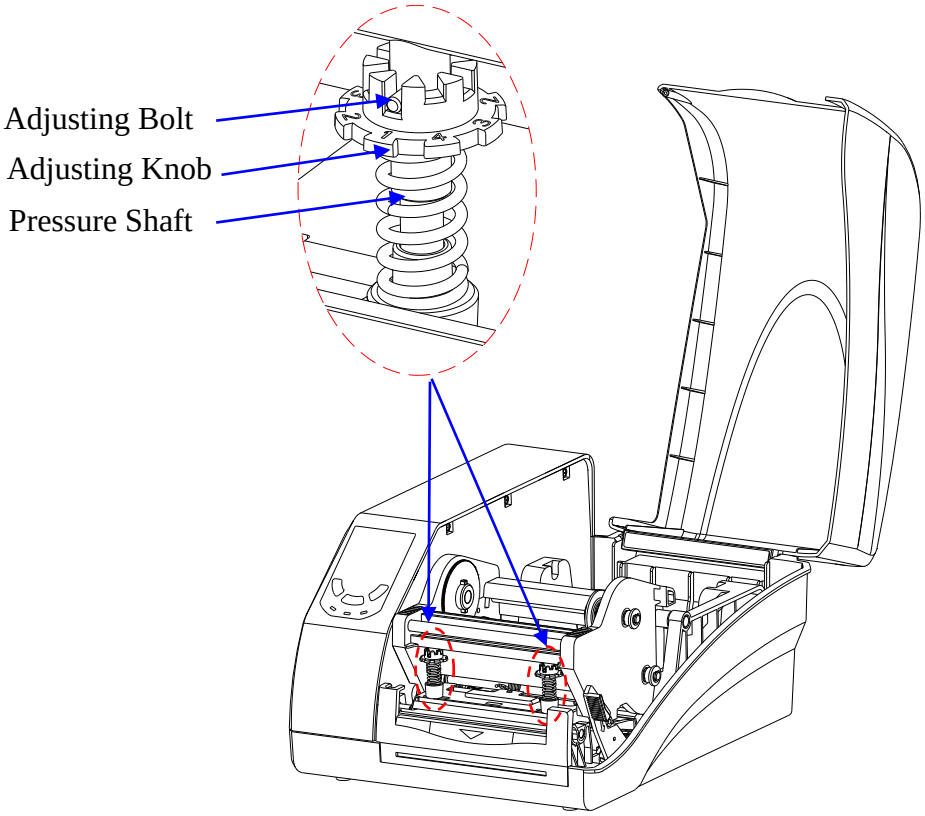

Figure 3-7 Printhead Pressure Adjustment

Follow the steps below to adjust the printhead pressure:

1. Press down the Adjusting Knob, and twist the Adjusting Knob to align the numbered pressure level with the Adjusting Bolt to apply different level of pressure (The bigger the number, the more pressure the spring assembly brings to the printhead).
2. Repeat step 1 on another spring assembly to complete the adjustment of the printhead pressure.

3.2.4 Adjusting the Ribbon Tension

The printer is equipped with a ribbon tension module, which can be used to adjust the tension on ribbon supply, as shown in Figure 3-8.

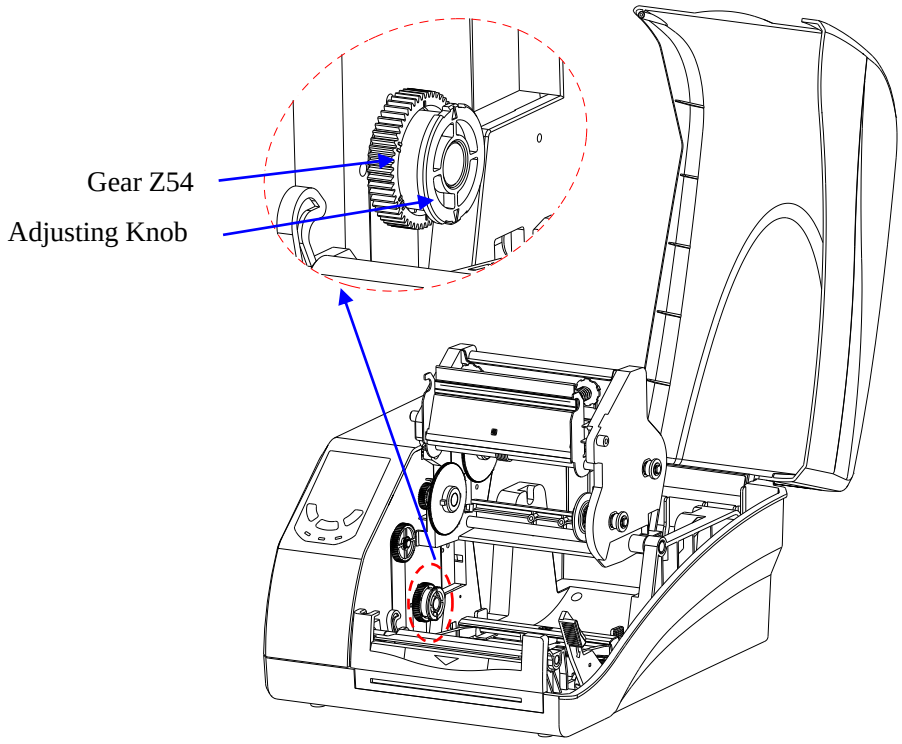

Figure 3-8 Ribbon Tension Adjustment

Follow the steps below to adjust the tension on ribbon supply:

1. Hold the Gear Z54 with your left hand and pull the Adjusting Knob outwards with your right hand.
2. Turn the Adjusting Knob to make the arrow point to one of the three level marks with III the biggest and I the lowest tension.

Chapter 4: Maintenance

WARNING

- *Make sure the printer is powered off before performing maintenance operations.*
- *The Printhead may be hot due to recent printing. Wait until the Printhead cools before performing maintenance.*
- *Use only anhydrous isopropyl alcohol to clean the print head.*

4.1 Cleaning the Printhead

Due to the Printhead's functionality in the printer, it comes into contact with consumables and therefore is susceptible to dirt accumulation. If dirt is not removed, the Printhead may be damaged. To ensure longevity of the Printhead, follow the recommended maintenance guidelines below:

Clean the Printhead after every (1) roll of ribbon use or every (3) rolls of label media use. To clean the Printhead:

1. Turn off the printer.
2. Open the right cover.
3. Push down the Printhead Release Lever to release the Printhead Module.
4. Remove the ribbon (if applicable) and media.
5. Use a cotton swab dipped in anhydrous isopropyl alcohol. Wipe the Printhead from end to end.
6. Allow a few seconds for the Printhead dry before using the printer again.

4.2 Cleaning the Platen Roller

The roller can accumulate debris from consumables, such as dirt, sand, dust or glue. To ensure longevity of the Platen Roller, follow the recommended maintenance guidelines below:

Clean the Platen Roller after every (3) rolls of label media used. To clean the Platen Roller:

1. Turn off the printer.
2. Open the right cover.
3. Push down the Printhead Release Lever to release the Printhead Module.
4. Remove the ribbon (if applicable) and media.
5. Use a cotton swab dipped in anhydrous isopropyl alcohol. Rub the swab along the Platen Roller from end to end while rotating the roller until the swab no longer accumulates ink or debris.

4.3 Cleaning the Printer Interior

Over time, the printer's interior may collect dust or debris from the consumables. It is advised to periodically clean the printer's interior in order to prevent the accumulated debris from damaging internal parts.
To clean the printer interior, use a cotton swabs dipped into anhydrous isopropyl alcohol and remove any debris.

4.4 Cleaning the Sensors

Over time, dust and debris will accumulate over the sensors and affect their performance, to ensure proper detection, please clean the sensors with cotton swabs dipped into anhydrous isopropyl alcohol periodically.

Chapter 5: Troubleshooting

Occasionally situations occur that require some troubleshooting. Possible issues and potential solutions are listed in this section. While not every situation is addressed, you may find some of these tips useful.

5.1 LED Error Indications

Typically, when the printer is not functioning, one or two of the three indicators will begin blinking. The possible situations addressed by the status of the three indicators are listed in Table 5-1.

Table 5-1 LED Error Indications

Indication	Possible Cause	Solutions	Important Notice
[READY] and [MEDIA] indicators blink simultaneously	Media sensor cannot detect media	• Check and confirm the media has been loaded correctly (Please refer to 2.2.4 Loading the Media) • Check the position of the media sensor and confirm it could detect the media gap, hole, notch or black mark.	If the media being used is continuous media (no locator present on the label). Then please set the media to continuous media in the printer driver settings.
	Media ran out	Install a new roll of media	If the printer has not been powered off and the print job has not been finished, after clearing the error: • Press [FEED/Calibration] button, the printer would reprint the previous label and then continue with the print job. • Press [CANCEL/Reset] button, the printer would resume the print job. • Press and hold the [CANCEL/Reset] button, the print job would be canceled.
	Media jammed	Clear the jam	
	The Media Roll Guides are not firmly pushed against the Media or have not been installed.	Install the Media Roll Guides correctly and push them firmly against the media.	
	Media sensor is dirty	Clean the media sensor	
	Media sensor is out of order	Contact an authorized POSTEK service provider for technical support.	
[READY] and [RIBBON] indicators blink simultaneously	Out of ribbon	Load a new roll of ribbon	
	Ribbon jammed	Make sure the ribbon follows a steady and smooth path	
	Ribbon spindle installed incorrectly	Please refer to 2.2.3 Loading the Ribbon for correct installation process	
	Ribbon sensor is dirty	Clean the ribbon sensor	
	Ribbon Sensor is out of order	Contact an authorized POSTEK service provider for technical support.	
Only [READY] indicator blinks	The printer is in a paused state	Press the [PAUSE/Self Test] button to resume.	

Indication	Possible Cause	Solutions	Important Notice
	Cutter error	Please check whether the cutter is installed correctly, for details, please contact an authorized POSTEK service provider for technical support.	

5.2 Miscellaneous Issues

Table 5-2 identifies miscellaneous issues with the printer, the possible causes, and the recommended solutions.

Table 5-2 Miscellaneous Printer Issues

Problem	Possible Cause	Recommended Solution
Vertical Blank Lines Appear	Printhead is dirty.	Clean the Printhead. Follow the recommended maintenance guidelines for cleaning the Printhead.
Data Sent but Not Printing	The driver is incorrect.	Ensure the correct driver is chosen in the label software.
	Memory overflow	Reset the printer.
Poor Printing Quality	The printing parameters are set inappropriately.	• Adjust print darkness setting value. • Adjust print speed setting value.
	Printhead is dirty.	Clean the Printhead. Follow the recommended maintenance guidelines for cleaning the Printhead.
	Poor quality consumables	Change to higher-quality consumables.

NOTE

For errors not listed here, please contact an authorized POSTEK Service Provider for further assistance.

Appendix A: Interface Specifications

The RS232 connector on the printer is a DB9F:

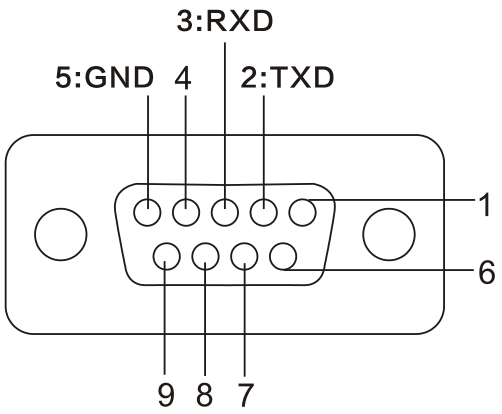

Number	Description	Definition
1	/	/
2	Out	TX
3	In	RX
4	/	/
5	-	Ground
6	/	/
7	/	/
8	/	/
9	/	/

Baud rate: 9600, 19200, 38400, 57600 and 115200
Data format: 8 data bits, 1 start bit or 1 stop bit.
Flow control: None. If you are using software or drivers under the Windows environment, the flow control must be set to "hardware."

Any communications port can transmit data from the host (RS232, Ethernet, or USB). Preliminary communications settings are not required since the printer will automatically detect which port is active.

CAUTION

Never send data from 2 ports at the same time. Data cannot be sent to more than one port simultaneously or data corruption and print errors may occur.

Appendix B: ASCII Table

	0	1	2	3	4	5	6	7
0	NUL			0	@	P	`	p
1	SOH	XON	!	1	A	Q	a	q
2	STX		"	2	B	R	b	r
3		XOFF	#	3	C	S	c	s
4			$	4	D	T	d	t
5		NAK	%	5	E	U	e	u
6	ACK		&	6	F	V	f	v
7	BEL		'	7	G	W	g	w
8	BS		(	8	H	X	h	x
9			)	9	I	Y	i	y
A	LF		*	:	J	Z	j	z
B		ESC	+	;	K	[	k	{
C	FF		,	<	L	\	l	|
D	CR		-	=	M	]	m	}
E	SO	RS	.	>	N	^	n	~
F	SI	US	/	?	O	_	o	DEL
	0	**1**	**2**	**3**	**4**	**5**	**6**	**7**

NOTE

The € sign is included in the embedded table at DEC128 or HEX 80.

POSTEK

RUGGED PARTS, DURABLE MACHINES