POSTEK **ROBO-TOUCH**

Smart Print Labeling Robot



The Future of Intelligent Label Application
Smaller, Safer, Smarter

In a manufacturing world moving rapidly toward automation and digitalization, POSTEK introduces a breakthrough solution that redefines how labels are printed, handled, and applied. The Smart Print Labeling Robot merges POSTEK's multi-interactive smart printing platform with collaborative robotics, creating a new paradigm of compact, agile, intelligent label application.

Print & Apply — Redefined

Smart Printing Meets Robotics — A New Standard for Labeling Automation

The Smart Print Labeling Robot replaces bulky mechanical motion with collaborative robotics, coordinated directly by a POSTEK smart printer. The result is a system that is: **Smarter. Smaller. Safer. Faster. Easier to integrate.**

Core Advantages

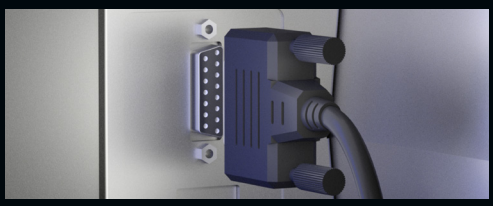

Direct Printer-to-Robot Communication, No PLC Needed

POSTEK smart printers feature built-in General I/O and Logic Control, enabling direct communication with cobots without an external PLC. This means simpler integration, fewer components, lower cost, and faster deployment — no complex wiring or extra motion controllers required.



Compact & Lightweight Labeling System

By replacing the traditional multi-axis tamp mechanism with a collaborative robot, ROBO-TOUCH delivers a streamlined footprint and greater deployment flexibility. It fits easily into tight or complex production spaces while offering enhanced mobility and scalability — ideal for modern, space-conscious production lines.



Faster Labeling Through Intelligent Coordination

With built-in logic control (or customizable OX Script), ROBO-TOUCH synchronizes printing, label transfer, and precise label placement as a unified workflow.The printer and cobot operate in real-time coordination — reducing cycle time, increasing throughput, and accelerating labeling efficiency.



Simpler Deployment & Lower Maintenance

With fewer mechanical components and no compressed air system required, ROBO-TOUCH offers less wear, lower service costs, easier troubleshooting, and higher uptime.
Its all-electric architecture enhances reliability and reduces long-term operating expenses.



Customizable Tamp-Head for Complex Surfaces

Traditional tamp applicators often struggle with curved, cylindrical, uneven, or recessed surfaces.ROBO-TOUCH supports custom tamp-head engineering — including soft pads, flexible faces, articulated joints, or shaped surfaces — to ensure full contact, consistent adhesion, and accurate label placement, even on challenging geometries.



Enhanced Safety — Made for Human–Robot Collaboration

Collaborative robots feature built-in safety technologies — including force/torque limits, collision detection, and soft-stop/slow-down modes. This significantly reduces the need for physical guarding, making deployments safer, more compact, and easier to integrate into existing production environments.

Optional Intelligent Modules

Elevate your robot labeling station even further with



VisualGuard™
On-device print integrity inspection

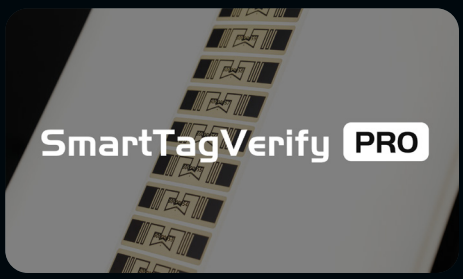

SmartTagVerify Pro™
RFID encoded data verification
(for RFID models)

System Configuration

The labeling robot is delivered as a complete system, with the base configuration including three core modules:



Smart Label Printer

Industrial-grade performance ensures stable output, with intelligent management of the entire label printing process.



Automated Labeling Robot Arm

Performs multi-surface labeling with precise execution, adaptable to various workstations.



Integrated Workstation Cabinet (Plug & Play)

Highly integrated control system simplifies deployment and setup.

Available Robot Models

Each combines POSTEK' s advanced smart printer technology with the adaptability of collaborative robotics.



OX Robo-Touch



TX Exp Robo-Touch

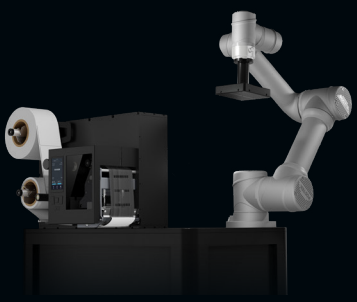

MX Robo-Touch

Robot Arm Specifications

Application Mode	Touch-on
Label Size for Application	Width: 20 ~ 120 mm Height: 20 ~ 200 mm
Labeling Speed*	30 labels/min
Max Working Radius	886.5 mm
Applying Directions	On the top, on the below, or on the side
Size of the Product to Be Labeled	Variable
Power Source	100 ~ 240 VAC, 50/60 Hz
Operating Environment	Temperature: 32°F ~ +104°F (0°C ~ 40°C) Relative humidity: 5% ~ 90% non-condensing Maximum Altitude: 5000 m
Storage Environment	Temperature: -40°F ~ +140°F (-40°C ~ 60°C) Relative humidity: 5% ~ 90% non-condensing

* The labeling speed varies depending on the height of the label and the selected print speed, the Labeling Speed here is base on a label height of 100 mm and a printing speed of 8ips.

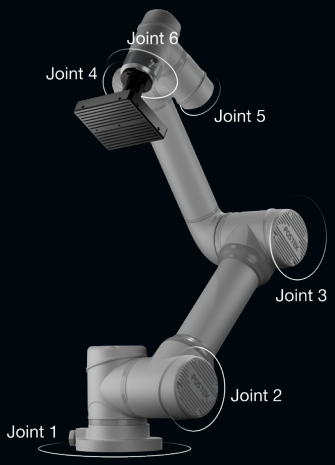

Joint	Ranges	Max Speed
Joint 1	± 360 °	147 °/s
Joint 2	± 175 °	147 °/s
Joint 3	± 162 °	147 °/s
Joint 4	± 175 °	178 °/s
Joint 5	± 175 °	178 °/s
Joint 6	± 360 °	178 °/s



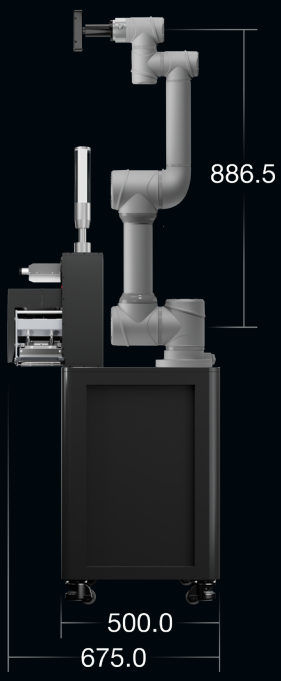

Unit: mm

This is the standard MX Robo-Touch. Dimensions are customizable according to your application requirements.

OX Robo-Touch Specifications

Model	OX2 Robo-Touch	OX3 Robo-Touch	OX6 Robo-Touch	OX318 Robo-Touch
Model with RFID	OX2r Robo-Touch	OX3r Robo-Touch	OX6r Robo-Touch	OX318 Robo-Touch
Print Mode	Direct Thermal and Thermal Transfer			
Print Resolution	203 dpi	300 dpi	600 dpi	300 dpi
Max Print Speed	18 ips (457.2 mm/s)	14 ips (355.6 mm/s)	6 ips (152.4 mm/s)	12 ips (304.8 mm/s)
Max Print Width	4.09" (104 mm)	4.16" (105.7mm)	4.16" (105.6 mm)	6.6" (168 mm)
MPU	64-bit, quad core, maximum operating frequency 1.8 GHz			
Memory	2 GB DDR RAM, 8 GB Flash ROM			
Wireless Module	WiFi IEEE 802.11a/b/g/n/ac/ax, 2.4/5.8 GHz, Bluetooth 5.0			
HEAT™ Level①	I			
RFID Encoder	Supports UHF EPC Gen 2, ISO 18000-6C protocols (Only available for RFID models)			
Media Roll	Width: 0.39" ~ 4.72" (10 ~ 120 mm)			Width: 1.18" ~ 7.09" (30 ~ 180 mm)
	Maximum Outer Diameter: 9" (228.6 mm) Inner Diameter: 3" (76.2mm)			
Media Thickness	Regular Barcode Label and Regular RFID Label: 0.0024" ~ 0.012" (0.06 ~ 0.305 mm), including liner			
	Mount-on-Metal RFID Label② : 0.063" (1.6 mm) max., including liner			
Ribbon	Width: 0.79" ~ 4.33" (20 ~ 110 mm)			Width: 1.18" ~ 6.93" (30 ~ 176 mm)
	Maximum Ribbon Length: 1968' (600 m) Maximum Outer Diameter: 3.38" (86 mm) Inner Diameter: 1" (25.4 mm) Ink side: both In and Out			
Media Sensor	Upper reflective: detects black marks on print side Lower reflective: detects black marks on back side Transmissive: detects gaps, notches, holes			
Interfaces	RS-232 Serial, 10/100/1000Mbps Ethernet, USB DEVICE 2.0, USB HOST, General I/O Signal Interface, Applicator Peripheral Logic Control I/O Signal Wiring Terminal Block (Optional)			
LCD Display	4.5" LCD Capacitive Touchscreen			
Power Source	100 ~ 240 VAC, 50/60 Hz			

① HEAT™ (Heating Equilibrium Adaptive Tuning) developed by POSTEK, is a cutting-edge technology in heating control of thermal printheads. With HEAT™, the POSTEK printers can significantly improve their performance in the aspects of printout clarity and print speed. The HEAT™ level represents the fineness of the heating uniformity with level I being the finest.

② For Mount-on-Metal RFID tags, the flexibility of the tag and whether or not to use fillings to bridge the gaps between tags can affect print quality and even encoding success rate. It is strongly recommended to test the tags on this POSTEK printer before purchasing.

Optional Configuration

SmartTagVerify*	External-mount module (Only available for RFID models)
VisualGuard*	The visual verifier is available in the following configurations, which can be selected based on needs and budget: For **4-inch** Printers: • **VG4 Scan:** CIS camera continuous scanning, barcode data verification. • **VG4 Static:** Industrial camera static capture, label height up to 3 inches, barcode data verification, label integrity inspection. • **VG4 Pro:** Industrial camera continuous capture, unlimited label height, barcode data verification, label integrity inspection. For **6-inch** Printers: • **VG6 Scan:** CIS camera continuous scanning, barcode data verification. • **VG6 Pro:** Industrial camera continuous capture, unlimited label height, barcode data verification, label integrity inspection.

***** Factory dependent.

TX Exp Robo-Touch Specifications

Model	TX2 Exp Robo-Touch	TX3 Exp Robo-Touch	TX6 Exp Robo-Touch
Model with RFID	TX2r Exp Robo-Touch	TX3r Exp Robo-Touch	TX6r Exp Robo-Touch
Print Mode	Direct Thermal and Thermal Transfer		
Print Resolution	203 dpi	300 dpi	600 dpi
Max Print Speed	16 ips (406.4 mm/s)	12 ips (304.8 mm/s)	6 ips (152.4 mm/s)
Max Print Width	4.09" (104 mm)	4.16" (105.7mm)	4.16" (105.6 mm)
MPU	64-bit, quad core, maximum operating frequency 1.8 GHz		
Memory	2 GB DDR RAM, 8 GB Flash ROM		
HEAT™ Level①	I		
RFID Encoder	Supports UHF EPC Gen 2, ISO 18000-6C protocols (Only available for RFID models)		
Media Roll	Width: 0.39" ~ 4.72" (10 ~ 120 mm) Maximum Outer Diameter: 8" (203.2 mm) Inner Diameter: 1.5" (38 mm) / 3" (76.2 mm)		
Media Thickness	Regular Barcode Label and Regular RFID Label: 0.0024" ~ 0.012" (0.06 ~ 0.305 mm), including liner		
	Mount-on-Metal RFID Label② : 0.063" (1.6 mm) max., including liner		
Ribbon	Maximum Ribbon Length: 1968' (600 m) Maximum Ribbon Width: 4.56" (116 mm) Maximum Outer Diameter: 3.31" (84 mm) Inner Diameter: 1" (25.4 mm) Ink side: both In and Out		
Media Sensor	Upper reflective: detects black marks on print side Lower reflective: detects black marks on back side Transmissive: detects gaps, notches, holes		
Interfaces	RS-232 Serial, 10/100/1000Mbps Adaptive Ethernet, USB DEVICE 2.0, USB HOST, General I/O Signal Interface		
LCD Display	4.5" LCD Capacitive Touchscreen		
Power Source	100 ~ 240 VAC, 50/60 Hz		

① HEAT™ (Heating Equilibrium Adaptive Tuning) developed by POSTEK, is a cutting-edge technology in heating control of thermal printheads. With HEAT™, the POSTEK printers can significantly improve their performance in the aspects of printout clarity and print speed. The HEAT™ level represents the fineness of the heating uniformity with level I being the finest.

② For Mount-on-Metal RFID tags, the flexibility of the tag and whether or not to use fillings to bridge the gaps between tags can affect print quality and even encoding success rate. It is strongly recommended to test the tags on this POSTEK printer before purchasing.

Optional Configuration

SmartTagVerify*	External-mount module (Only available for RFID models)
VisualGuard*	The visual verifier is available in the following configurations, which can be selected based on needs and budget: • **VG4 Scan:** CIS camera continuous scanning, barcode data verification. • **VG4 Static:** Industrial camera static capture, label height up to 3 inches, barcode data verification, label integrity inspection. • **VG4 Pro:** Industrial camera continuous capture, unlimited label height, barcode data verification, label integrity inspection.
Wireless Module*	WiFi IEEE 802.11a/b/g/n/ac/ax, 2.4/5.8 GHz, Bluetooth 5.0

* Factory dependent.

MX Robo-Touch Specifications

Model	MX2 Pro Robo-Touch	MX3 Pro Robo-Touch	MX6 Pro Robo-Touch
Model with RFID	MX2r Pro Robo-Touch	MX3r Pro Robo-Touch	MX6r Pro Robo-Touch
Print Mode	Direct Thermal and Thermal Transfer		
Print Resolution	203 dpi	300 dpi	600 dpi
Max Print Speed	18 ips (406.4 mm/s)	14 ips (304.8 mm/s)	6 ips (152.4 mm/s)
Max Print Width	4.09" (104 mm)	4.16" (105.7 mm)	4.16" (105.6 mm)
MPU	64-bit, quad core, maximum operating frequency 1.8 GHz		
Memory	2 GB DDR RAM, 8 GB Flash ROM		
HEAT™ Level①	I		
RFID Encoder	Supports UHF EPC Gen 2, ISO 18000-6C protocols (Only available for RFID models)		
Media Roll	Width: 0.39" ~ 4.72" (10 ~ 120 mm) Maximum Outer Diameter: 12" (304.8 mm) Inner Diameter: 3" (76.2 mm)		
Media Thickness	0.0024" ~ 0.012" (0.06 ~ 0.305 mm), including liner		
Ribbon	N/A	Maximum Ribbon Length: 1968' (600 m) Maximum Ribbon Width: 4.56" (116 mm) Maximum Outer Diameter: 3.31" (84 mm) Inner Diameter: 1" (25.4 mm) Ink side: both In and Out	
Media Sensor	Upper reflective: detects black marks on print side Lower reflective: detects black marks on back side Transmissive: detects gaps, notches, holes		
Interfaces	RS-232 Serial, 10/100/1000Mbps Ethernet, USB DEVICE 2.0, USB HOST, General I/O Signal Interface, Logic Control I/O Signal Wiring Terminal Block		
LCD Display	4.5" LCD Capacitive Touchscreen		
Power Source	100 ~ 240 VAC, 50/60 Hz		

① HEAT™ (Heating Equilibrium Adaptive Tuning) developed by POSTEK, is a cutting-edge technology in heating control of thermal printheads. With HEAT™, the POSTEK printers can significantly improve their performance in the aspects of printout clarity and print speed. The HEAT™ level represents the fineness of the heating uniformity with level I being the finest.

② For Mount-on-Metal RFID tags, the flexibility of the tag and whether or not to use fillings to bridge the gaps between tags can affect print quality and even encoding success rate. It is strongly recommended to test the tags on this POSTEK printer before purchasing.

Optional Configuration

SmartTagVerify*	External-mount module (Only available for RFID models)
VisualGuard*	The visual verifier is available in the following configurations, which can be selected based on needs and budget: • **VG4 Scan:** CIS camera continuous scanning, barcode data verification. • **VG4 Static:** Industrial camera static capture, label height up to 3 inches, barcode data verification, label integrity inspection. • **VG4 Pro:** Industrial camera continuous capture, unlimited label height, barcode data verification, label integrity inspection.
Ribbon Saving Kit*	Includes the following items: 1. Automatic Brake on the ribbon take-up spindle. 2. The automatic printhead open/close module. *Note: After purchasing the Ribbon Saving feature, a product key will be provided for activation.*
Wireless Module*	WiFi IEEE 802.11a/b/g/n/ac/ax, 2.4/5.8 GHz, Bluetooth 5.0

***** Factory dependent.



POSTEK

RUGGED PARTS, DURABLE MACHINES

POSTEK ELECTRONICS CO., LTD.

Wisdom Plaza, Block B, Tower 2, 18 Floor
Qiaoxiang Road, Nanshan District
518052 Shenzhen, Guangdong, China

Hotline: (+86) 755 83240988 ext.818
Email: overseas@www.postek.com.cn
Website: www.postekchina.com

POSTEK US INC.

13809 Research Blvd, STE 500
Austin, Texas 78750
United States

Hotline: (+1) 512 3346455
Email: info@postekus.com
Website: www.postekus.com